Viscount GTE

Installation, Assembly and Servicing

Oil, Gas or Dual Fuel Fired Boilers

Assembly and Installation Instructions for Ideal Viscount Oil, Gas or Dual Fired heating boilers should be read in conjunction with the general technical data tables enclosed and any other technical publication supplied with the burner.

CAUTION: To avoid the possibility of injury during the installation, servicing or cleaning of this appliance care should be taken when handling edges of sheet steel components.

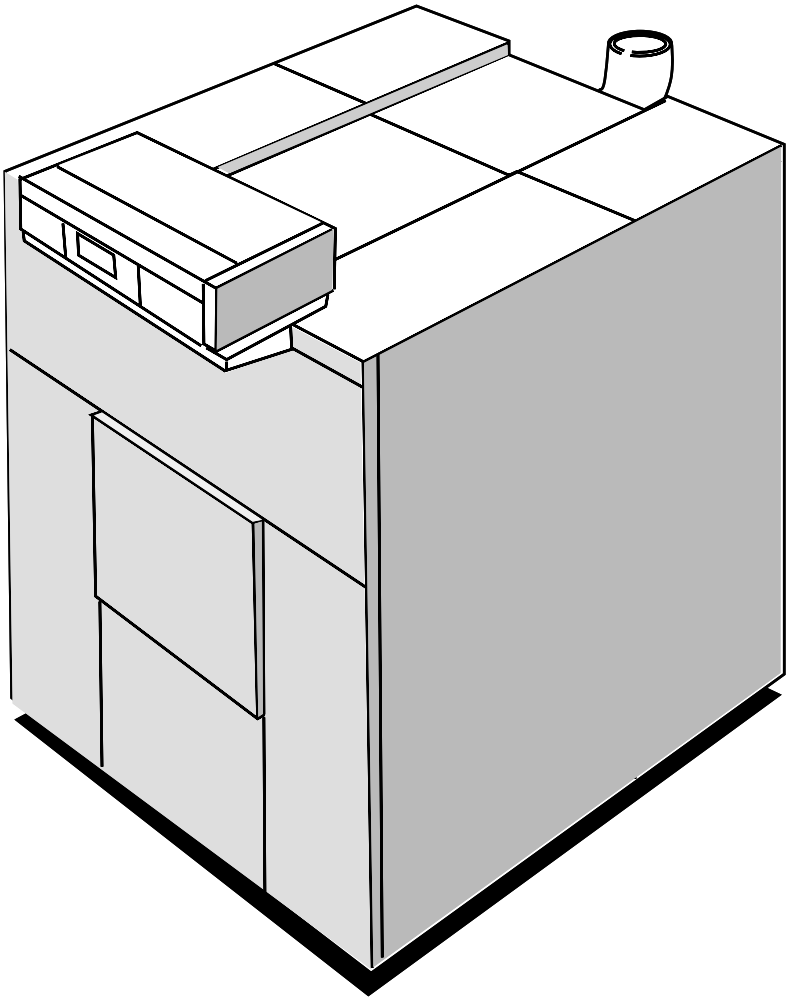

Ideal BOILERS

spares & parts online
IBASIS.co.uk©

94863157 - 85254022 A, 05/01

WARNING

The boiler shall be assembled and installed by a qualified professional only.

Strict compliance with these assembly, installation and maintenance instructions is a precondition for the correct operation of the boiler

Contents

1. General 2
- 1.1 Technical Specifications of Combination Boilers .. 3
- 1.2 Main Dimensions 4

2. Installing The Boiler 5
- 2.1 Boiler Location 5
- 2.2 Ventilation 5

3. Assembly 5

4. Hydraulic Connections 6
- 4.1 Dimensional Information Required 6
- 4.2 Installation Recommendations 6
- 4.3 Filling the System 7
- 4.4 Sludge Removal 7

5. Chimney Connection 7
- 5.1 Flue Size 7
- 5.2 Connecting to the Flue 8

6. Assembly of Viscount GTE Boilers 9

7. Control Panel 41
- 7.1 Standard 41
- 7.2 Deluxe 47

8. Fuel-Oil or Gas Connections 54

9. Servicing and Maintenance 54
- 9.1 Cleaning 54
- 9.2 Cleaning the Casing Material 57
- 9.3 Precautions Required in the Case of Long Boiler Stops (one or more years) 57
- 9.4 Precautions Required if the Heating is Stopped when there is a Risk of Freezing 57

10. Burner Maintenance 57

11. System Maintenance 57
- 11.1 Water Level 57
- 11.2 Draining 57

12. Identification Plate 57

1. GENERAL

The boilers of the Viscount GTE range are pressurised hot water boilers designed for connecting to a flue pipe which require a separate automatic fuel-oil or gas burner. The heat output of Viscount GTE boilers is between 754 and 1450 kW.

Models available :

- **Viscount GTE**

  Boiler with standard control panel designed to be connected to the electrical cabinet.

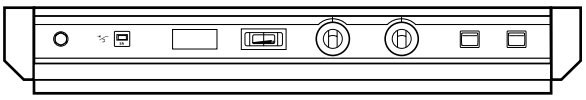

VIS5054

- **Viscount GTE De Luxe**

  Boiler with “De Luxe” control panel, providing additional features including running lights and extra wiring facilities.

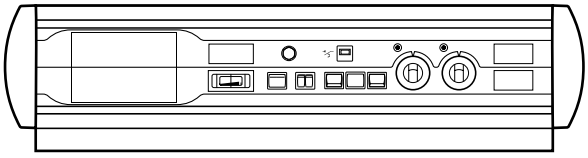

VIS5055

Option Kits:

Flue Gas Thermometer	Pack ID28
Hour Run Meter	Pack IC8
M.T.H.W. Kit	Pack CM21

CONFORMITY / CE MARKING

This Product complies with the requirements of the following European directives and standards:

- 90.396 CEE Gas Appliance Directive Relevant standard : EN 303.1 / EN 303.2 / EN 304.
- 73.23 CDD Low Voltage Directive Relevant standard : EN 60.335.1.
- 89.336 CEE Electromagnetic Compatibility Directive Relevant standard : EN 50.081.1 / EN 50.082.1 / EN 55.014.

1.1 Technical Specifications of Combination Boilers

Boiler:

Maximum operating pressure : 6 bar
Maximum operating temperature : 100ºC

Boiler thermostat setting 30 - 85ºC
Safety thermostat setting 110ºC

Boiler Size (no. of sections)		14	15	16	17	18	19	20	21	22	23	24	25
Maximum heat output	kW	812	870	928	986	1044	1102	1160	1218	1276	1334	1392	1450
	Btu/h x 10^3	2770	2968	3166	3364	3562	3760	3958	4156	4354	4552	4749	4947
Minimum heat output	kw	754	812	870	928	986	1044	1102	1160	1218	1276	1334	1392
	Btu/h x 10^3	2573	2770	2968	3166	3364	3562	3760	3958	4156	4354	4552	4749
Boiler water content	l	655	693	731	769	807	845	905	943	981	1019	1057	1095
	gal	144	152	161	169	177	186	199	207	216	224	232	241
Hydraulic resistance at 15K	mbar	30	34.7	14	15	17.5	19	21.5	23.7	26	28.3	31	33.5
	in.w.g.	12	13.8	5.6	6	7	7.6	8.6	9.5	10.4	11.3	12.4	13.4
Combustion chamber Resistance (at zero draught)	mbar	2.3	2.4	2.5	2.6	2.7	2.85	3	3.1	3.2	3.3	3.4	3.5
	in.w.g.	0.92	0.96	1	1.04	1.08	1.14	1.2	1.24	1.28	1.32	1.36	1.4
Boiler Dry weight less Burner unit	kg	3045	3249	3422	3601	3780	3949	4181	4355	4539	4708	4890	5062
	lb	6713	7162	7544	7938	8333	8706	9217	9601	10,006	10,379	10,780	11,159
Maximum oil rate	l/h	82.73	88.64	94.55	100.5	106.4	112.3	118.2	124	130	135.9	142	147.7
	gal/h	18.2	19.5	20.8	22.1	23.4	24.7	26	27.3	28.6	29.9	31.2	32.5
Maximum flue gas volume (oil)* * 13% CO2 at 210C	m^3/sec	0.51	0.55	0.59	0.62	0.66	0.70	0.73	0.77	0.81	0.84	0.88	0.92
	ft^3/min	1081	1166	1250	1314	1399	1483	1547	1632	1717	1780	1865	1950
Maximum gas rate	m^3/h	84.4	90.4	96.4	102.4	108.5	114.5	120.5	126.5	132.5	138.6	144.6	150.6
	ft^3/h	2980	3192	3403	3616	3831	4043	4255	4466	4678	4894	5106	5317
Maximum flue gas volume (gas)* * 9.5% CO2 at 210C	m^3/sec	0.57	0.61	0.65	0.69	0.73	0.77	0.81	0.85	0.89	0.94	0.98	1.02
	ft^3/min	1208	1293	1377	1462	1547	1632	1717	1801	1886	1992	2077	2162

Notes:

Fuel rates and flue gas data relate to maximum output ratings.

Gas firing data relates to the use of NATURAL GAS ONLY.

Details for the use of LPG are available on request from Caradon Ideal Ltd.

The gas rate at calorific values differing from the standard quoted above may be calculated by direct proportion. CALORIFIC VALUE: 38.5 MJ/m^3 (1,035 Btu/ft^3).

1.2 Main Dimensions

Viscount GTE

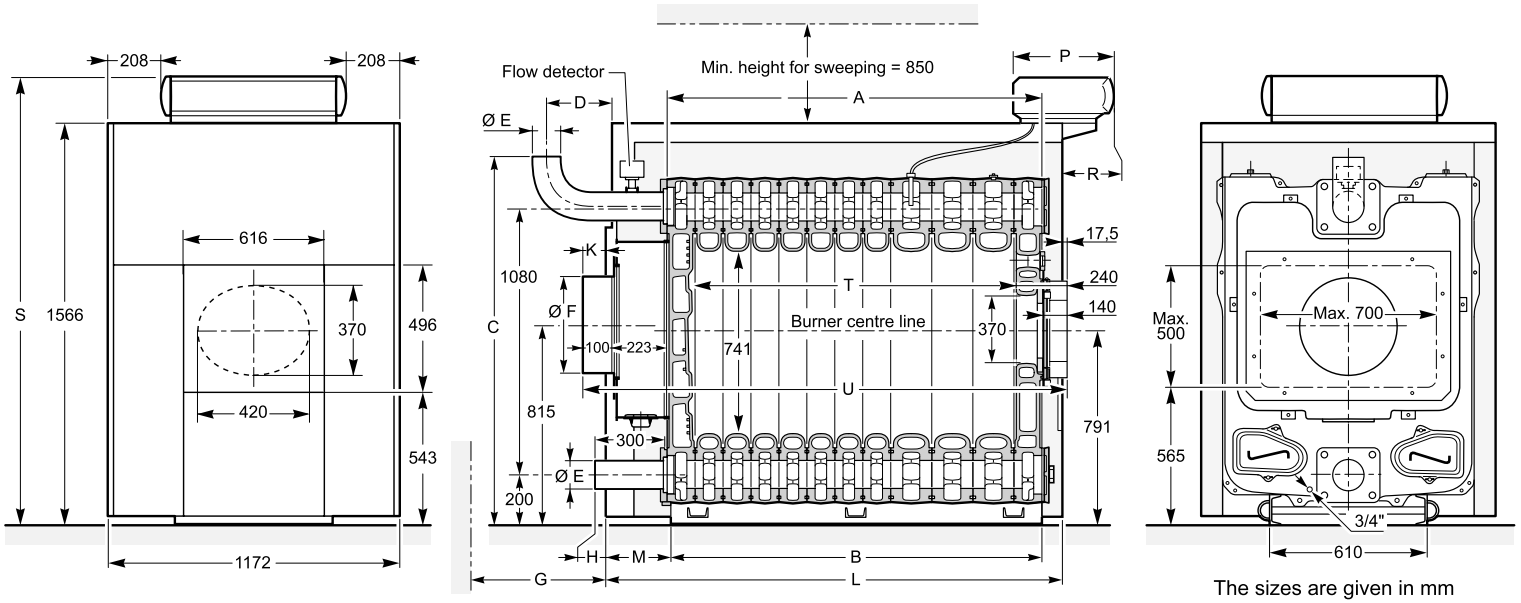

The sizes are given in mm

VIS5056

GTE Boiler		14	15	16	17	18	19	20	21	22	23	24	25
A (mm)		1674	1785	1896	2007	2118	2229	2380	2491	2602	2713	2824	2935
B (mm)		1744	1744	1966	1966	2188	2188	2450	2450	2672	2672	2894	2894
C (mm)		1488	1488	1488	1488	1504	1504	1504	1504	1504	1504	1504	1504
D (mm)		217	188	189	210	236	257	208	209	230	231	252	253
ø E (weld)		139.7	139.7	139.7	139.7	159	159	159	159	159	159	159	159
ø F (mm)		450	450	450	500	500	500	500	*	*	*	*	*
G (mm)		-	150	150	370	370	370	650	650	650	980	980	980
H (mm)		-2	-31	-30	-9	-8	13	-36	-35	-14	-13	8	9
K** (mm)		10	-19	-18	3	4	25	-24	-23	-2	-1	20	21
L (mm)		2105	2245	2355	2445	2555	2645	2845	2955	3045	3155	3245	3355
M (mm)		259	324	269	321	265	299	269	324	269	324	249	303
P (mm)	De Luxe	355	355	355	355	355	355	355	355	355	355	355	355
	Standard	130	130	130	130	130	130	130	130	130	130	130	130
R (mm)	De Luxe	175	175	175	175	175	175	175	175	175	175	175	175
	Standard	20	20	20	20	20	20	20	20	20	20	20	20
S (mm)	De Luxe	1760	1760	1760	1760	1760	1760	1760	1760	1760	1760	1760	1760
	Standard	1670	1670	1670	1670	1670	1670	1670	1670	1670	1670	1670	1670
T (mm)		1483	1594	1705	1816	1927	2038	2189	2300	2411	2522	2633	2744
U (mm)		2132.5	2243.5	2354.5	2465.5	2576.5	2687.5	2838.5	2949.5	3060.5	3171.5	3282.5	3393.5

* Plain plate, requires cutting. Maximum cut-out 500 x 700m

G = Length required for clearing the water distributing tube

** Dimension representing the end of the 100 mm long chimney connection

Note: with models 21, 22, 23, 24 and 25, a plain plate which must be cut out is supplied without the 100 mm chimney connection.

2. INSTALLING THE BOILER

2.1 Boiler Location

For the assembly and because of their design, GTE boilers require no special base or stand and their closed furnace system means that the floor need not have refractory properties. All you have to ensure is that the floor can support the weight of the boiler when it is fitted for operation. If the boiler location is not determined precisely, leave enough space around the boiler to facilitate monitoring and maintenance operations.

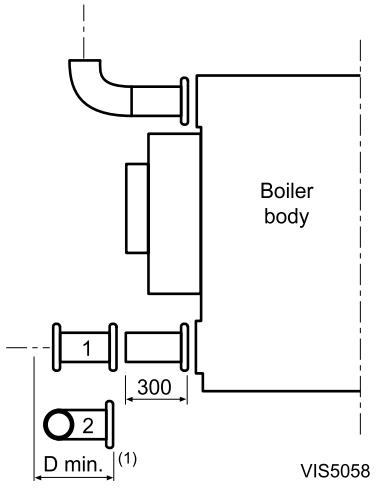

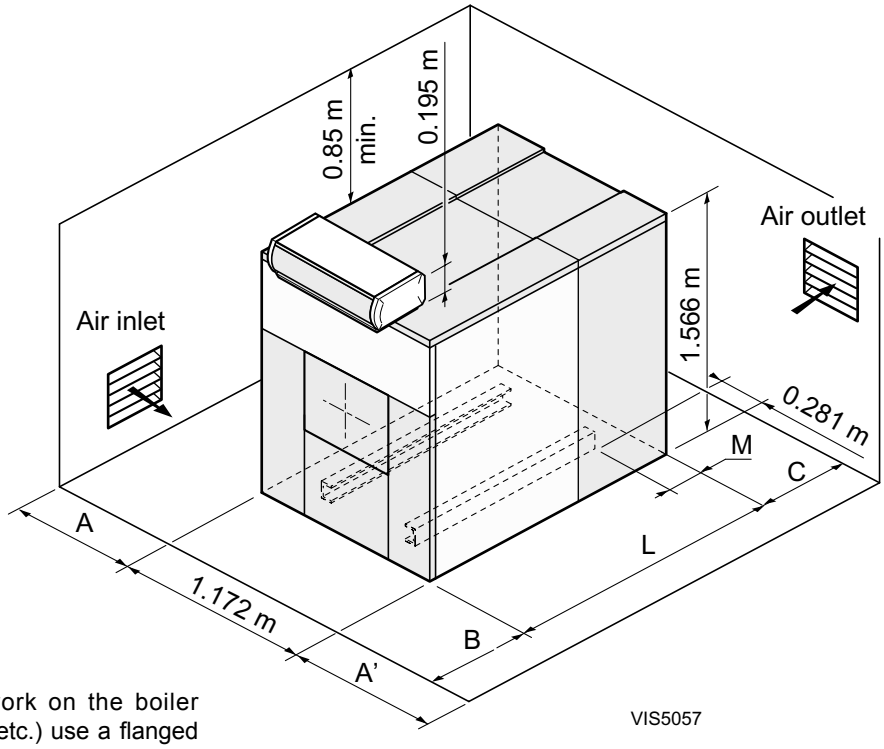

1. Straight connection (not supplied)
2. Angled connection (not supplied)

(1) In order to facilitate subsequent work on the boiler (replacing the water distributing tube etc.) use a flanged connection from the boiler to the system, making sure you comply with minimum clearance dimension **D**.

If **A = 1.2 m** (door opening side), **A' = 0.5 m**

If **A = 0.5 m, A' = 1.2 m** (door opening side) : adapt the dimensions on the basis of the dimensions of the burner when the door is open.

B = 1.5 m : adapt the dimensions on the basis of the dimensions of the burner.

GTE	14	15	16	17	18	19	20	21	22	23	24	25
L	2105	2245	2355	2445	2555	2645	2845	2955	3045	3155	3245	3355
M	259	324	269	321	265	299	269	324	269	324	249	303
Cmin.	300	436	436	656	656	656	936	936	936	1266	1266	1266
Dmin.	-	136	136	356	356	356	636	636	636	966	966	966

2.2 Ventilation

The ventilation shall comply with applicable regulations, particularly codes of practice.

Detailed recommendations for air supply are quoted in B.S. 6644.

Please note : remember that boilers installed in or close to rooms in which the atmosphere is polluted with chlorine or fluorine compounds may be subject to high corrosion.

For example : hairdressing salons, industrial premises (solvents), cooling equipment, etc.

Boiler installed in such locations shall not be covered by the warranty.

3. ASSEMBLY

For boiler assembly refer to relevant later pages of this instruction book.

4. HYDRAULIC CONNECTIONS

4.1 Dimensional Information Required

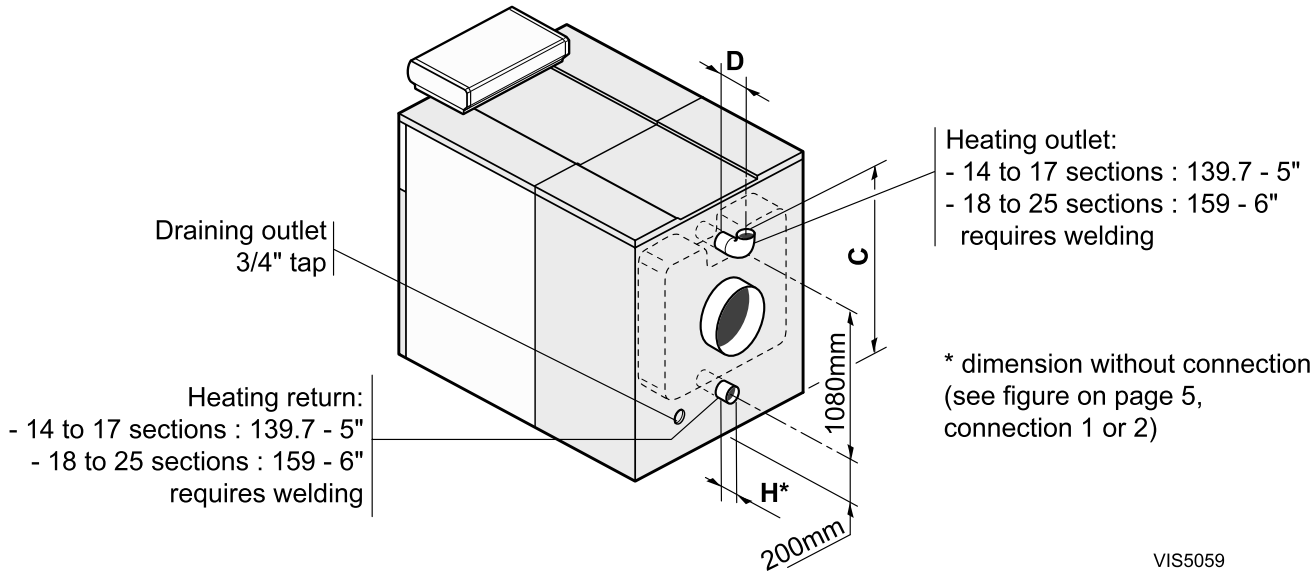

GTE	14	15	16	17	18	19	20	21	22	23	24	25
C (mm)	1488	1488	1488	1488	1504	1504	1504	1504	1504	1504	1504	1504
D (mm)	217	188	189	210	236	257	208	209	230	231	252	253
H (mm)	-2	-31	-30	-9	-8	13	-36	-35	-14	-13	8	9

4.2 Installation Recommendations

The installation of the boiler MUST be in accordance with the following British Standards and Codes of Practice:

BS. 799 Pts. 4, 5, 6 & 7	Oil Burning Equipment
BS. 5410 Pts. 2 & 3	Installations for Space Heating and Hot Water Supply
BS. 5449 PT. 1	Hot Water Systems
BS. 5854	Flues and Flue Structures in Buildings
BS. 5885 Pt. 1	Gas Burners - with outputs of 60kW upwards
BS. 6644	Installation of Gas Fired Boilers
BS. 6880	Low Temperature Hot Water Heating Systems
BS. 6891	Low Pressure Gas Pipework
British Gas Publication No. IM.11	Industrial Gas Fired Boilers and Air Heaters

General

Recommendations relating to the water system are contained in BS. 5449 Pt. 1, BS. 1, BS. 5401 Pt.2, and BS. 6880.

The following must be conformed with:
Current Building Regulations and Clean Air Act
Water Authority Regulations
Local Authority Regulations and Regional bylaws
Gas Safety Regulations

Any special regional requirements of local Electricity and Gas undertaking.

Fire Service and Insurance Company requirements.

All electrical wiring MUST comply with the current I.E.E. regulations for the electrical equipment of buildings. In the interests of safety, a competent installer should be employed to effect the installation of the appliance. Manufacturer's notes must NOT, in any way, be taken as over riding statutory obligations.

4.3 Filling the System

Filling shall be performed with a low flow rate from a low point in the boiler room in order to ensure that all the air in the boiler is bled from the high point of the system.

Always stop the pump before filling.

VERY IMPORTANT :
Instructions for starting up the boiler for the first time after the system is fully or partly drained :

If all the air is not bled naturally to an expansion vessel which opens out onto the air, the system must include manual bleeder valves, in addition to automatic bleeder valves with the capability to bleed the system by themselves when it is operating. The manual bleeder valves are used to bleed all the high points of the system and to make sure that the filled system is free of air before the burner is turned on.

General

Recommendations relating to the water system are contained in BS. 5449 Pt. 2 and BS. 6880.

4.4 Sludge Removal

A tapped ø 2" hole with a plug has been provided on the bottom of the front of the boiler. Fit a quarter-turn valve on the opening to remove the sludge.

Sludge removal leads to the draining of large quantities of water, so remember to refill the system after the operation.

NOTE:

Never replace a boiler in an existing system without carefully rinsing the system first. Install a sludge trap on the return pipe, very close to the boiler.

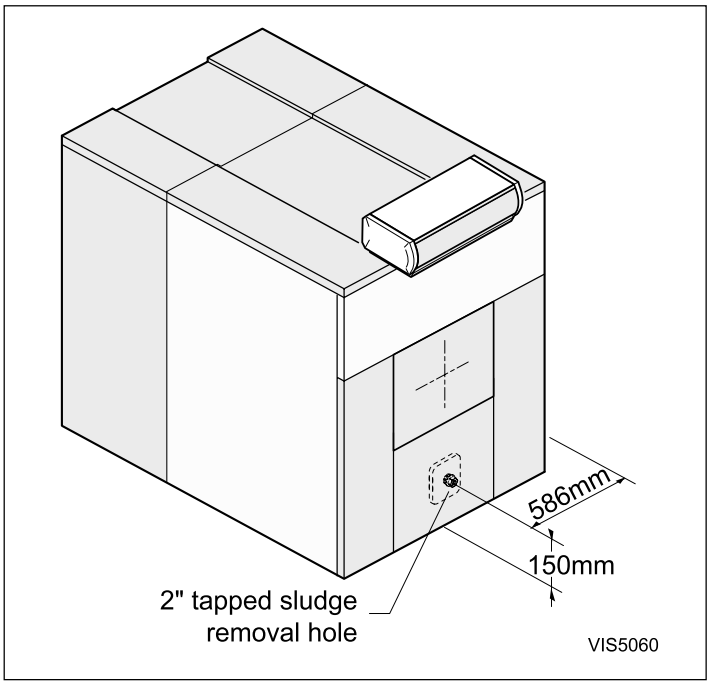

5. CHIMNEY CONNECTION

The high-performance features of modern boilers and their use in specific conditions as a result of the advance in burner technology (e.g. first-stage or low modulation range operation) lead to very low flue gas temperatures (less than 160°C).

This requires :

- Flue insulation.
- the use of flue pipes designed to enable the flow of condensates which may result from such operating modes, in order to prevent damage to the chimney.
- the installation of a draining tee at the foot of the chimney.

The use of a draught moderator is recommended as well.

5.1 Flue Size

Refer to applicable regulations while determining the size and height of the flue. Please note that GTE boilers have pressurised and tight furnaces and that the pressure at the outlet must not exceed 0 mbar, unless special sealing precautions have been taken, for instance in order to connect a static condenser.

Detailed recommendations relating to the design of flues for GAS fired appliances are quoted in BS. 6644 and British Gas Publication No. IM11, whilst BS. 5410 Pt. 3 similarly applies to OIL fired boilers.

5.2 Connecting to the flue

The connection shall be removable, and offer minimum load losses, i.e. it must be as short as possible with no sudden change in section.

Its diameter shall always be at least equal to that of the boiler outlet, i.e. :

- ø 450 mm for 14-16 sections
- ø 500 mm for 17-20 sections
- Boilers with 21-25 sections are supplied with a plain plate. The maximum cutout dimensions are 500 x 700 mm.

Fit a measuring point (ø 10 mm hole) on the flue, in order to adjust the burner (combustion check).

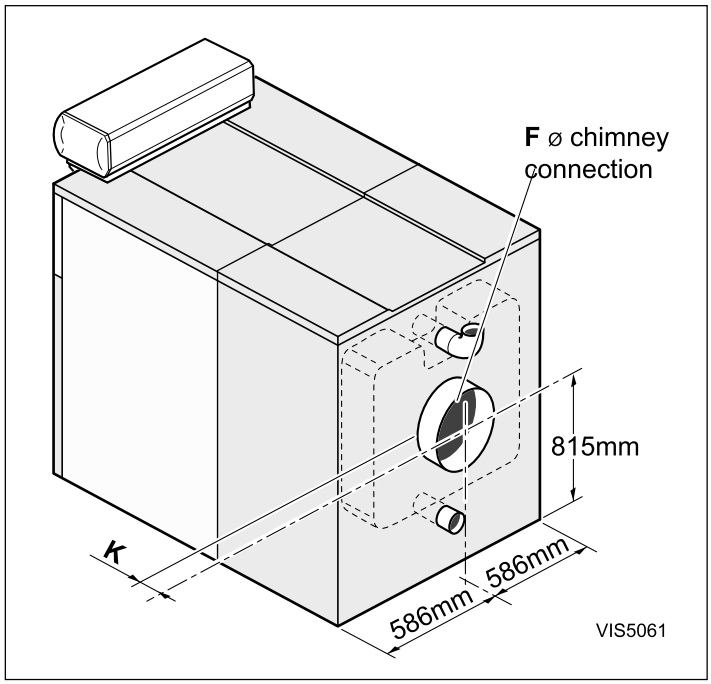

GTE	14	15	16	17	18	19	20	21	22	23	24	25
Ø F (mm)	450	450	450	500	500	500	500	plain plate	plain plate	plain plate	plain plate	Plain plate
K (mm)	10	-19	-18	3	4	25	-24	-23*	-2*	-1*	20*	21*

* Dimension representing the end of the 100 mm long chimney connection.

Note: with models 21, 22, 23, 24 and 25 a plain plate which requires cutting out is supplied without the 100 mm long chimney connection.

6. ASSEMBLY OF VISCOUNT GTE BOILERS

IMPORTANT
Important : Assemble the boiler in the order given by the numbers of each figure, **in compliance with all the instructions**.

Packaging :

Before starting to assemble the boiler, refer to the table below to check if you have received all the packages required.

Boiler Body and Accessories

- **Boilers supplied with an assembled body**: start assembly from figure 11

GTE boiler Number of sections	**14**	**15**	**16**	**17**	**18**	**19**	**20**	**21**	**22**	**23**	**24**	**25**
Assembled boiler body (contents depend upon model)	1	1	1	1	1	1	1	1	1	1	1	1
Cleaning tool kit (contents depend upon model)	1	1	1	1	1	1	1	1	1	1	1	1

- **Boilers supplied with an unassembled body**:

GTE boiler Number of sections	**14**	**15**	**16**	**17**	**18**	**19**	**20**	**21**	**22**	**23**	**24**	**25**
Frame (dimensions depend upon model)	1	1	1	1	1	1	1	1	1	1	1	1
Rear section	1	1	1	1	1	1	1	1	1	1	1	1
Normal intermediate section	9	10	11	12	13	14	14	15	16	17	18	19
Special intermediate section	3	3	3	3	3	3	4	4	4	4	4	4
Front section	1	1	1	1	1	1	1	1	1	1	1	1
Set of assembly rods + cleaning tools (contents depend upon model)	1	1	1	1	1	1	1	1	1	1	1	1
Standard accessory kit (contents depend upon model) 1 package	FA 49	FA 50*	FA 51*	FA 52*	FA 53*	FA 54*	FA 55	FA 56	FA 57	FA 58	FA 59	FA 60
Additional accessory kit (contents depend upon model) 1 package	FA 68**	FA 69	FA 70	FA 71	FA 72	FA 73	FA 74	FA 75	FA 76	FA 77	FA 78	FA 79
Plain furnace plate	1	1	1	1	1	1	1	1	1	1	1	1
Flue gas connection plate with opening ø 450	1	1	1									
Flue gas connection plate with opening ø 500				1	1	1	1					
Plain flue gas connection plate								1	1	1	1	1
Flue gas box	1	1	1	1	1	1	1	1	1	1	1	1
Distributing tube fitting *							1	1	1	1	1	1
Flow switch and technical instructions	1	1	1	1	1	1	1	1	1	1	1	1

* The distributing tube fitting for GTE boilers with 15 -19 sections is included in the accessory package.
** The diaphragm fitting for GTE boilers with 14 sections is included in the additional accessory kit package.

- **Baffle Plates**

GTE boiler Number of sections		**14**	**15**	**16**	**17**	**18**	**19**	**20**	**21**	**22**	**23**	**24**	**25**
Baffle Plates	Package CM 22		1	1	1	1	1						
	Package CM 23	1	1	1	1	1	1	2	2	2	2	2	2

- **Casing Fittings**

GTE boiler Number of sections		**14**	**15**	**16**	**17**	**18**	**19**	**20**	**21**	**22**	**23**	**24**	**25**
Casing Fittings	Package FA 5	1	1	1	1								
	Package FA 6					1	1	1	1	1	1	1	1
	Package FA 7	1											
	Package FA 8		1		1		1	1		1		1	
	Package FA 9			1		1			1		1		1
	Package FA 10				2	2	1			2	2	1	1
	Package FA 11	2	2	2	1	1	2	3	3	2	2	3	3

- **Variable Casing Parts**

GTE boiler	Number of sections	14	15	16	17	18	19	20	21	22	23	24	25
	Package FA 16					1	1	1	1	1	1	1	1
	Package FA 17					1							
	Package FA 18						1						
	Package FA 19							1					
	Package FA 20								1				
	Package FA 21									1			
	Package FA 22										1		
	Package FA 23											1	
	Package FA 24	1											1
	Package FA 25		1										
	Package FA 26			1									
	Package FA 27				1								

- **Body Insulating Material**

GTE boiler	Number of sections	14	15	16	17	18	19	20	21	22	23	24	25
Body insulating material	Package FA 34	1											
	Package FA 35		1										
	Package FA 36			1	1								
	Package FA 37					1	1						
	Package FA 38							1					
	Package FA 39								1	1			
	Package FA 40										1	1	
	Package FA 41												1

- **Control Panel**

GTE boiler	Number of sections	14	15	16	17	18	19	20	21	22	23	24	25
Standard control panel	Package FA 3	1	1	1	1	1	1	1	1	1	1	1	1
De Luxe control panel	Package FA 2	1	1	1	1	1	1	1	1	1	1	1	1

- **Accessories Available as an Option***

GTE boiler	Number of sections	14	15	16	17	18	19	20	21	22	23	24	25
Burner plate with 165, 186, 210, 240 or 295 ø hole		1	1	1	1	1	1	1	1	1	1	1	1
Smokehood plate with 400 ø opening or plain smokehead plate		1	1	1	1	1	1	1	1	1	1	1	1

Tools Required:

- JD-TE or JD-TE Plus assembly tool (+ extension for GT 22 or larger)
- Flat screwdriver
- No. 2 Pozidrive screwdriver
- 10, 13, 17 and 19 mm spanners
- 2mm tubular box spanner
- 27 mm tubular box spanner
- electric screwdriver + No. 2 Philips bit
- Stanley knife
- Silicone filler (supplied)

- **If the boiler is supplied with an assembled body**, start assembly from Figure 29.
- **Assemble the boiler body from the rear to the front**:
  - assemble the **rear** section,
  - assemble all the **normal intermediate** sections,
  - assemble all the **special intermediate** sections,
  - assemble the **front** section.

The number of sections of each type is provided in the table below:

Section Type:	104 Rear 8228-0004	111 Normal intermediate 8228-0001	151 Special intermediate 8228-0002	104 Front 8228-0003
GTE 14	1	9	3	1
GTE 15	1	10	3	1
GTE 16	1	11	3	1
GTE 17	1	12	3	1
GTE 18	1	13	3	1
GTE 19	1	14	3	1
GTE 20	1	14	4	1
GTE 21	1	15	4	1
GTE 22	1	16	4	1
GTE 23	1	17	4	1
GTE 24	1	18	4	1
GTE 25	1	19	4	1

VIS5062

1

Boilers with 14, 16, 18, 20, 22 and 24 sections

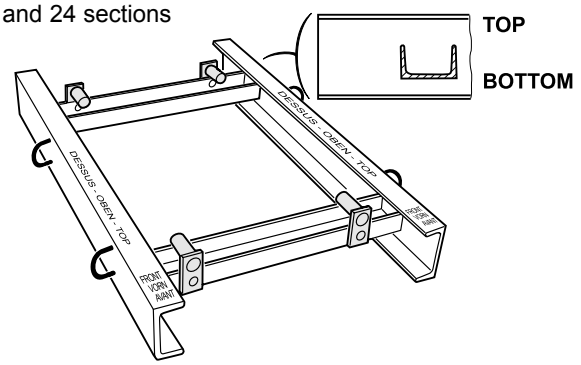

Boilers with 15, 17, 19, 21, 23 and 25 sections

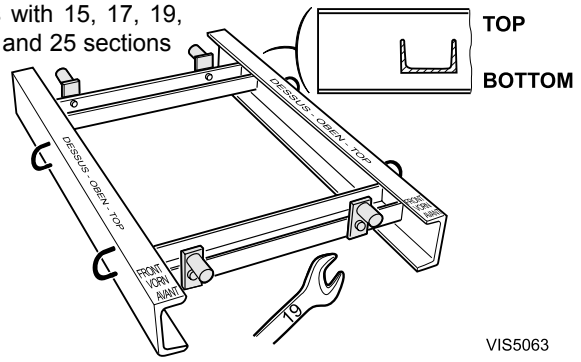

VIS5063

- Place the frame on the floor, taking care to note the TOP and FRONT positions.
- Fit **the fastening brackets** as shown, depending on the type of boiler (one ø 12x40 screw, 19 mm spanner).

2

14, 16, 18, 20, 22 and 24 sections

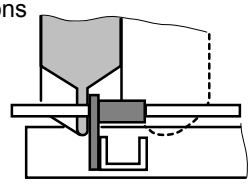

15, 17, 19, 21, 23 and 25 sections

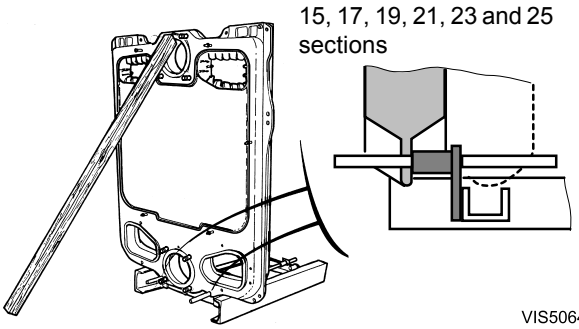

VIS5064

- Establish the location of the frame on the basis of the opening direction of the furnace door and the length of the burner. Leave enough clearance at the rear of the boiler for water connections (see § 4.1 of the instructions) and the distributing tube (see § 2 of the instructions and fig. 23 in this booklet).
- Fit the rear section on the frame, behind the fastening brackets (see detailed drawing) and prop it up.
- Insert the lower assembly rods in the holes of the rear section and the fastening brackets of the frame, in order to position the rear section correctly according to the frame.

3

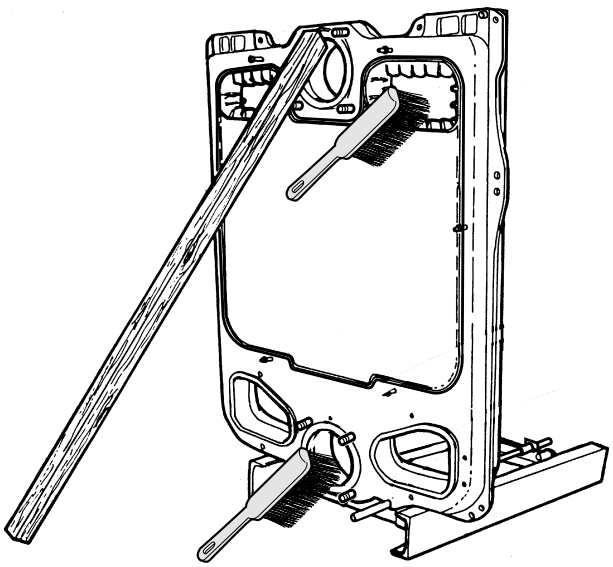

VIS5065

- Clean all the openings in the section with a brush. Remove any deposit on the bottom of the section.

4

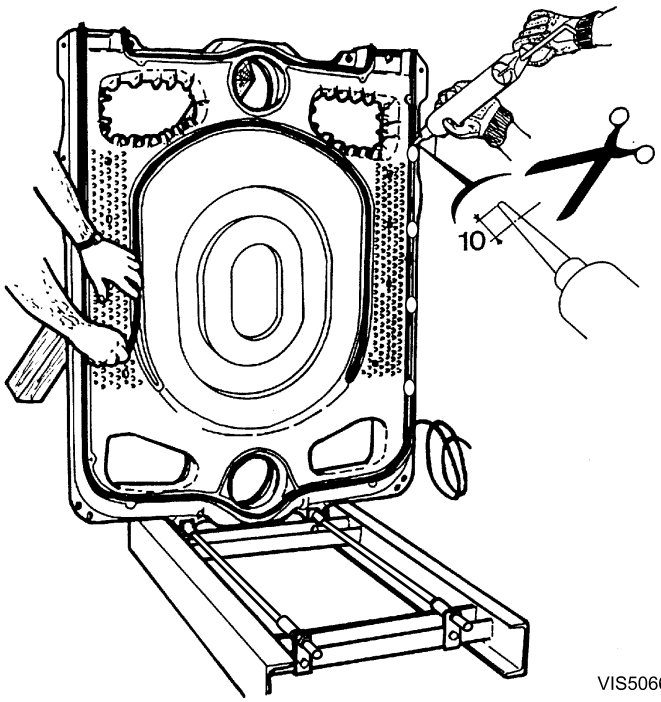

VIS5066

- Carefully insert the thermocord in the grooves of the section and retain it in place with a few drops of silicone filler (every 30 cm approximately).

  Note : do not pull on the seal while inserting it. Otherwise, you may stretch it and reduce its thickness.

5

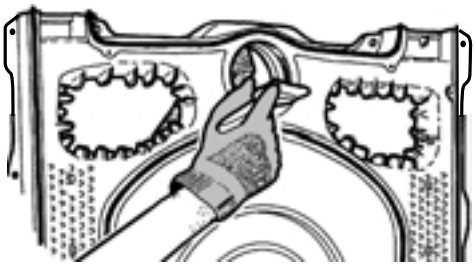

VIS5067

- Clean the bores and nipples with solvent. Remove any traces of rust-protective paint so that the surface is perfectly smooth. **Coat with the lubricant supplied with the sections.**

6

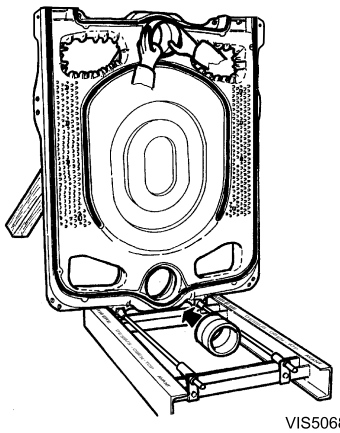

VIS5068

- Gently push in the two nipples

7

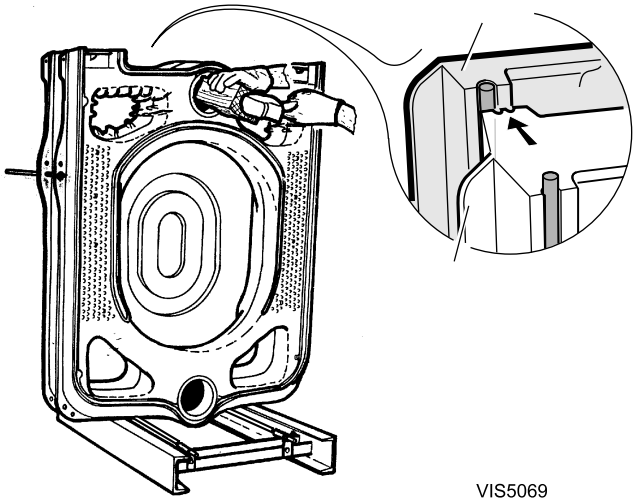

VIS5069

- Place the first normal intermediate section, making sure that it is turned in the right direction, i.e. with the flattening groove against the thermocord.
- For safety, insert a lateral assembly rod (supplied) in the holes of the two sections.
- Push the section gently and simultaneously onto both nipples of the rear section with a hammer and a piece of wood positioned in line with the bores.

8

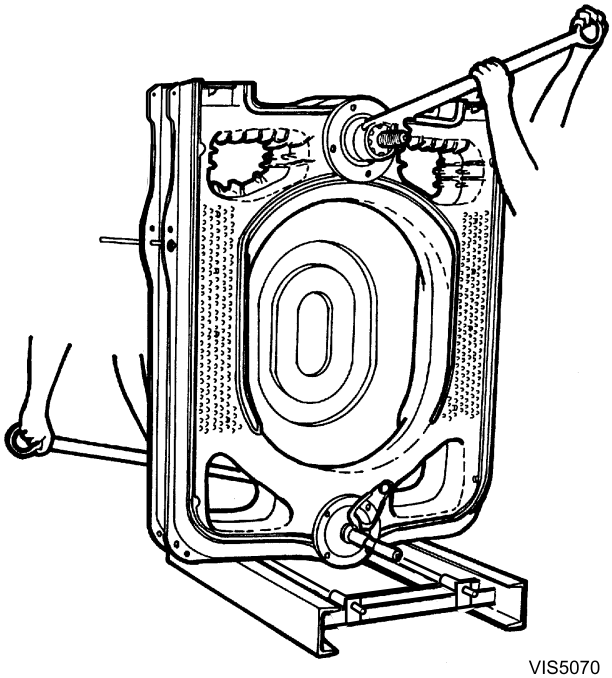

VIS5070

- Put the assembly tool in position.

  Tighten gradually so as to bring together the upper and lower connections evenly and simultaneously.

9

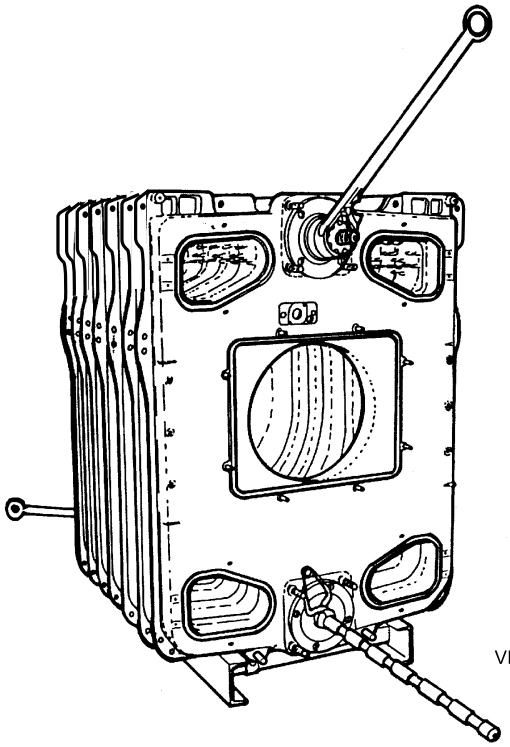

VIS5071

- Assemble the remaining intermediate sections one by one, to the procedure stated in figures 3, 4, 5, 6, 7 and 8.

  First assemble the normal intermediate sections, then the special ones (see page 11 of this booklet).

  Leave the assembly tool in place.

10

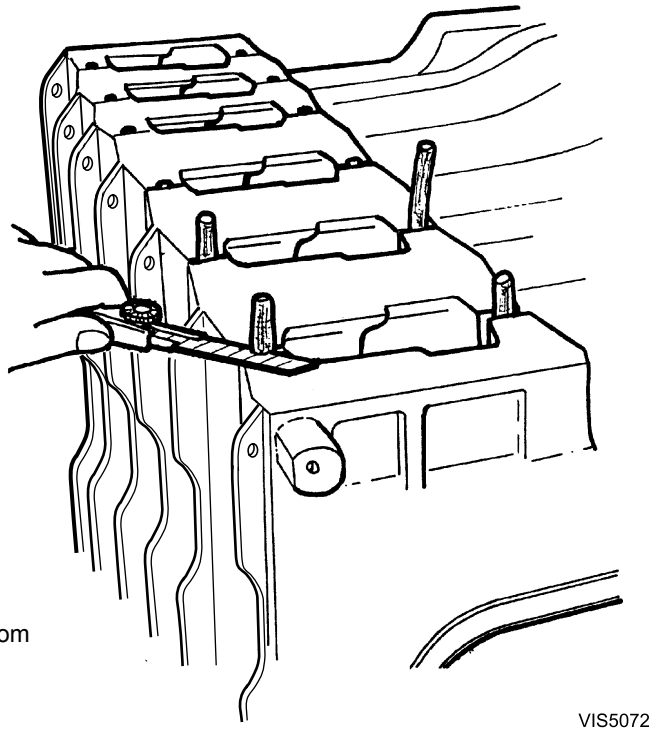

- Trim off any projecting ends of the thermocords from the sweeping covers.

11 Fitting the Upper and Lower Assembly Rods

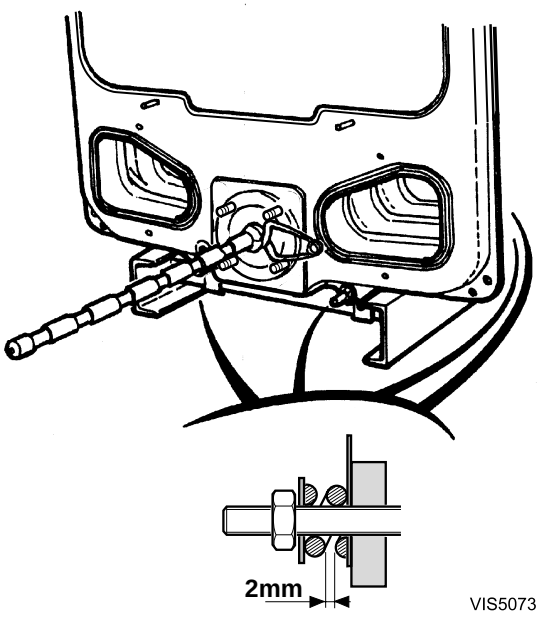

- On the lower assembly rods, fit the following at each end in the given order : an expansion spring, a washer and a nut (the holes of the front lugs must be aligned with the holes of the frame brackets as the assembly rods are used to make the boiler body integral with the frame).
- Stop tightening as soon as the gap between the spring spires is equal to about 2 mm.

12 Fitting the Upper and Lower Assembly Rods

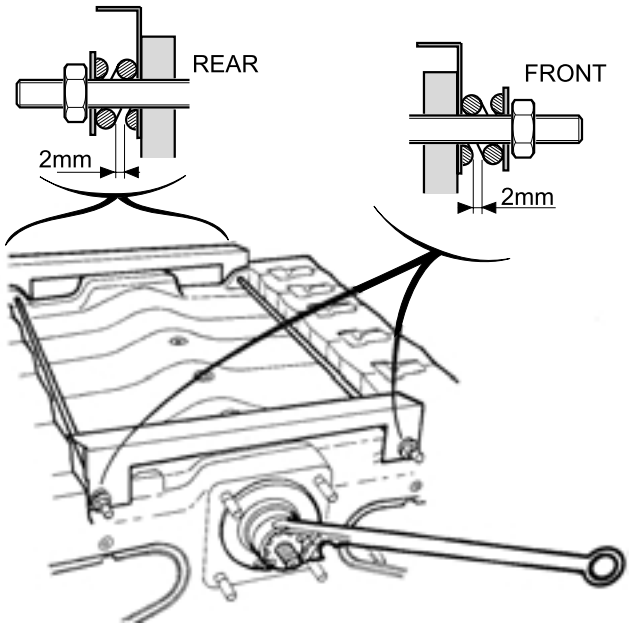

- Put in place the upper assembly rods in the two front and rear lugs.
- Mount the two crosspieces (supplied in package **FA5** / **FA6)** with their bends turned backwards and fasten them to the rods with an expansion spring, a nut and a washer.
- Remove the assembly tool.

- The side assembly rods must be assembled from the **rear** to the **front.**
- **The rods must be inserted in the holes stated in the diagrams** (the lugs of the sections in which the assembly rods are to be inserted have two holes).
- Place the expansion spring and washer **on the rear** of each rod.

Stop tightening the nuts as soon as the gap between the spires of the springs is about 1 mm.

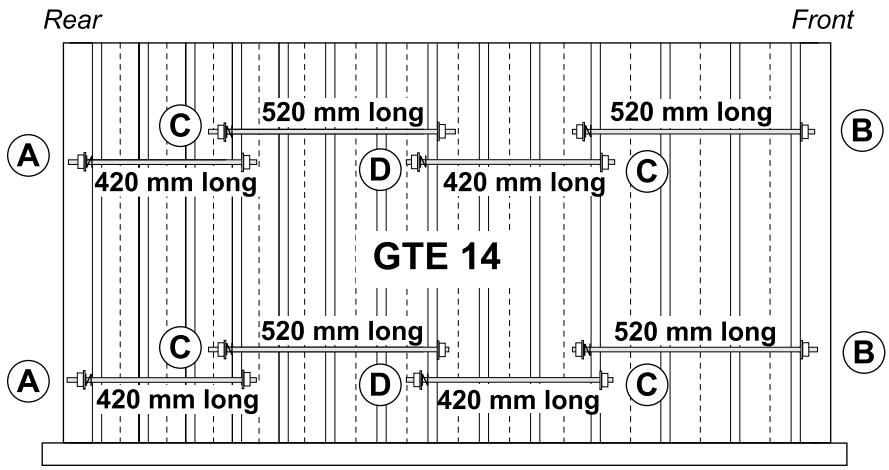

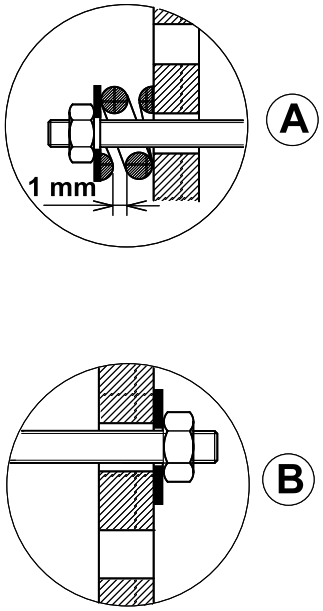

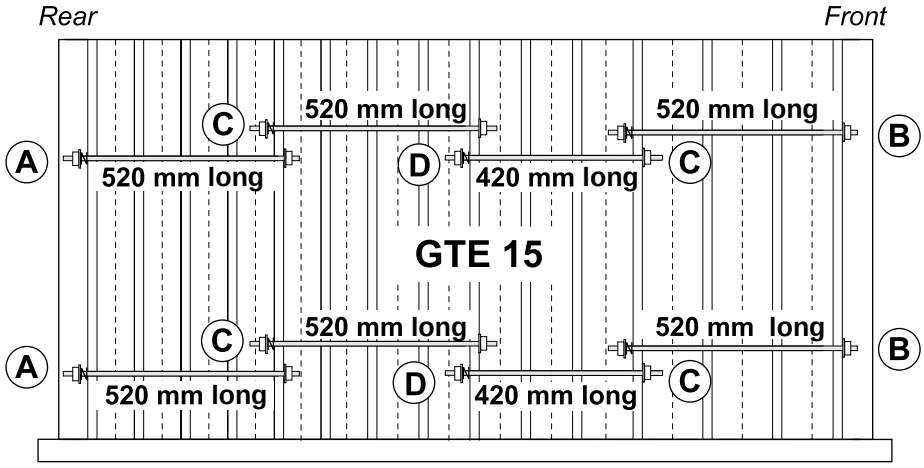

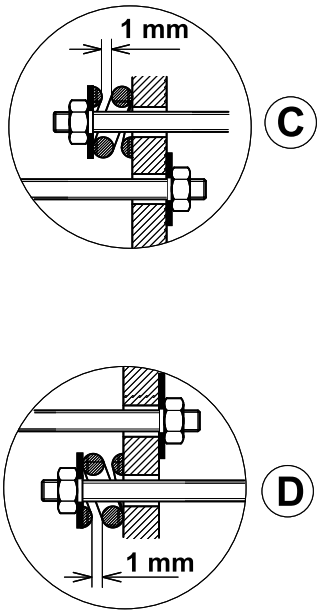

VIS5073

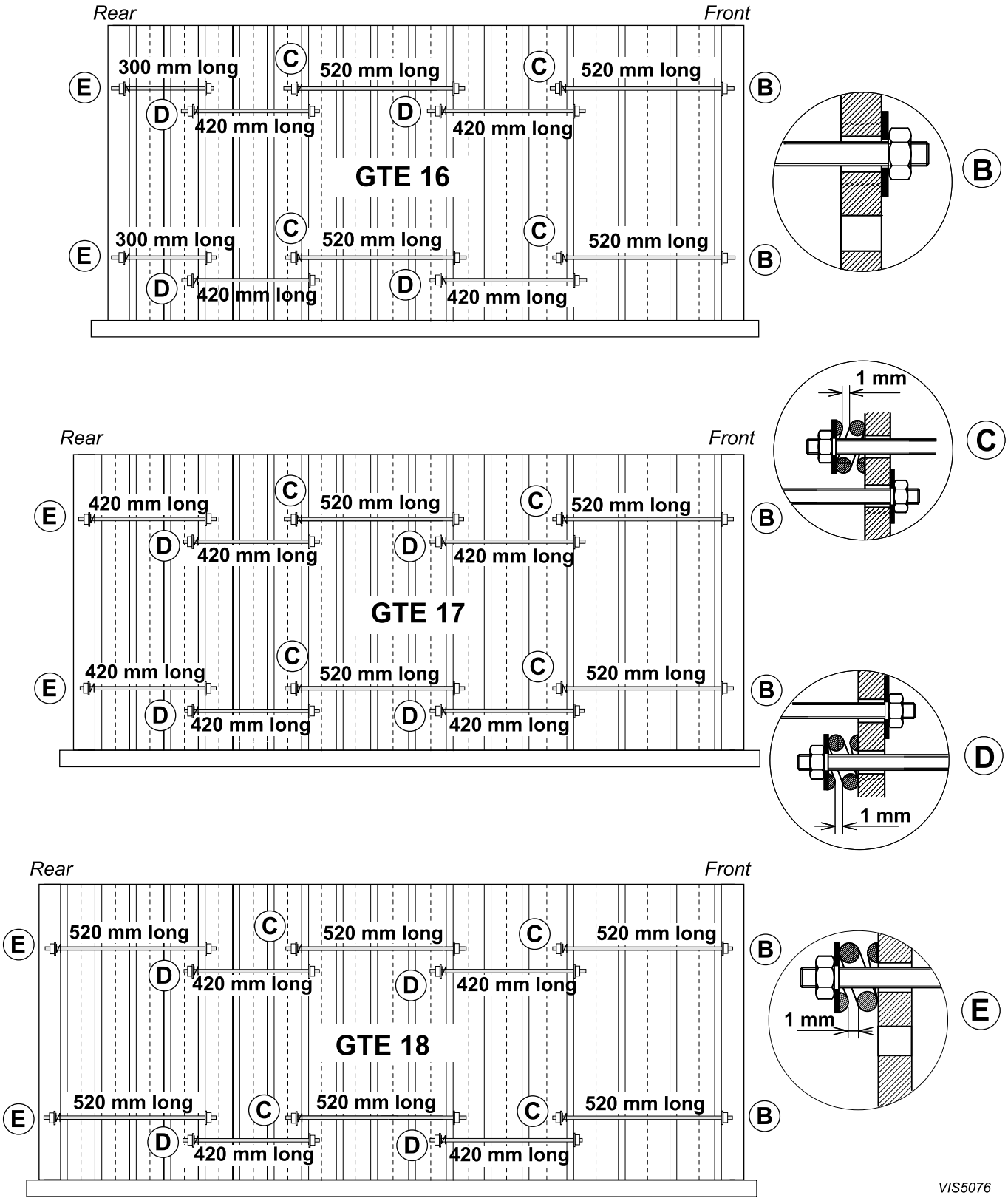
Rear
Front
300 mm long
520 mm long
520 mm long
420 mm long
420 mm long
GTE 16
300 mm long
520 mm long
520 mm long
420 mm long
420 mm long
B
1 mm
C
Rear
Front
420 mm long
520 mm long
520 mm long
420 mm long
420 mm long
GTE 17
420 mm long
520 mm long
520 mm long
420 mm long
420 mm long
B
D
1 mm
Rear
Front
520 mm long
520 mm long
520 mm long
420 mm long
420 mm long
GTE 18
520 mm long
520 mm long
520 mm long
420 mm long
420 mm long
B
1 mm
E
VIS5076

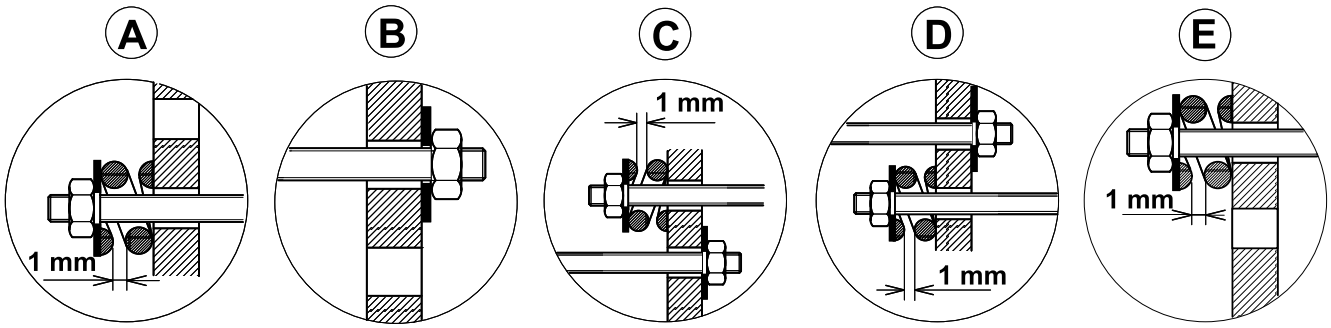
A
B
C
D
E
1 mm
1 mm
1 mm
1 mm

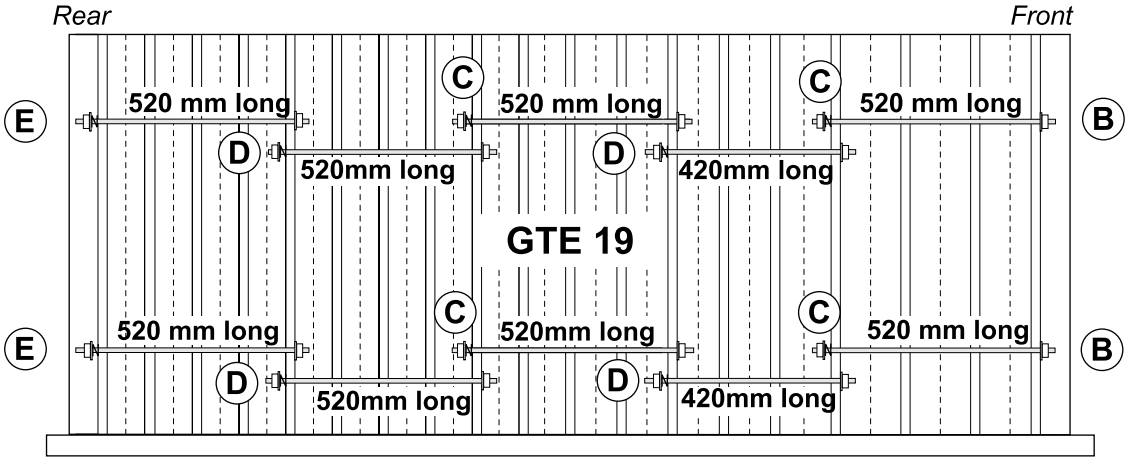
Rear
Front
E
B
C
D
520 mm long
520mm long
420mm long
GTE 19

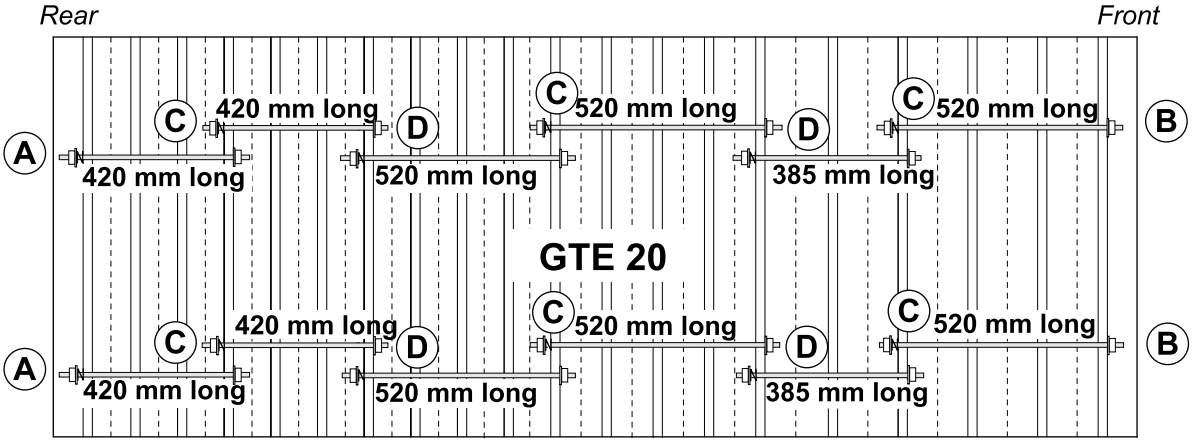
Rear
Front
A
B
C
D
420 mm long
520 mm long
385 mm long
GTE 20

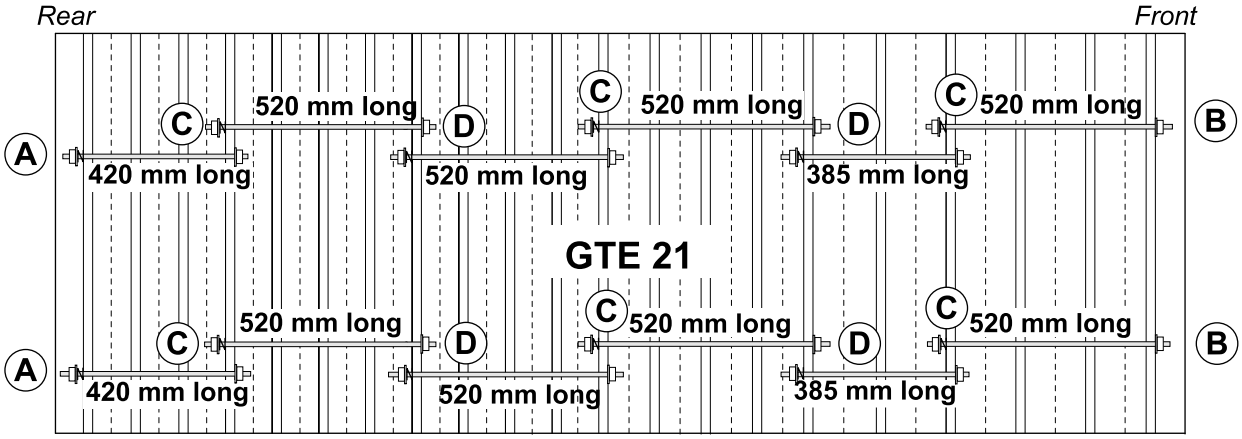
Rear
Front
A
B
C
D
420 mm long
520 mm long
385 mm long
GTE 21

VIS5077

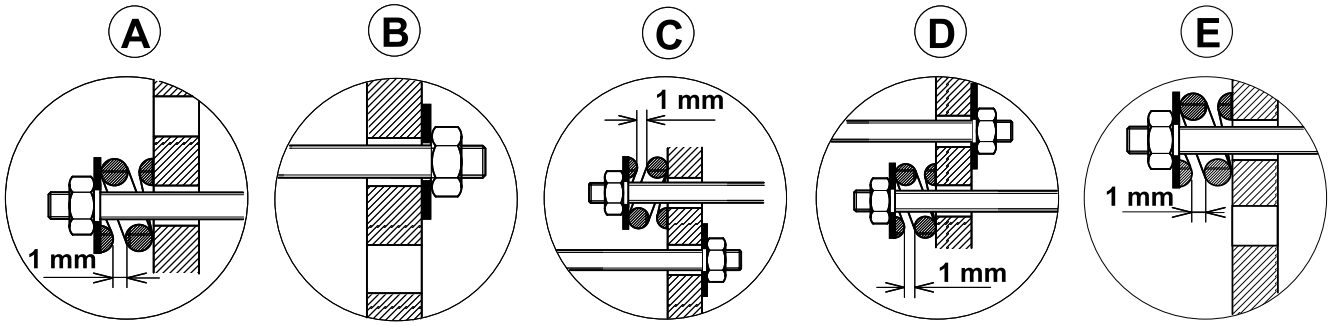
A
B
C
D
E
1 mm
1 mm
1 mm
1 mm

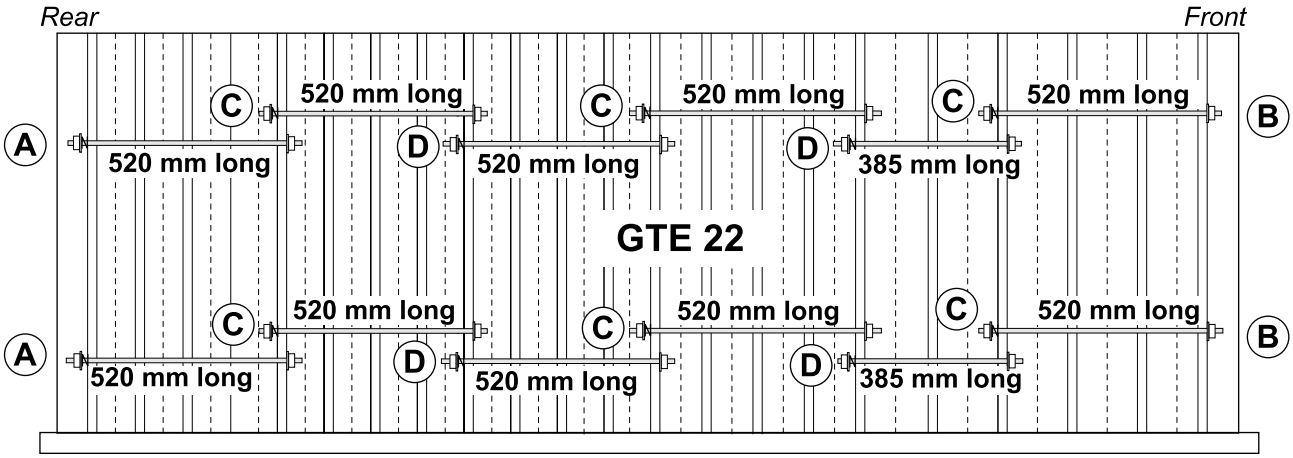
Rear
Front
A
B
C
D
520 mm long
385 mm long
GTE 22

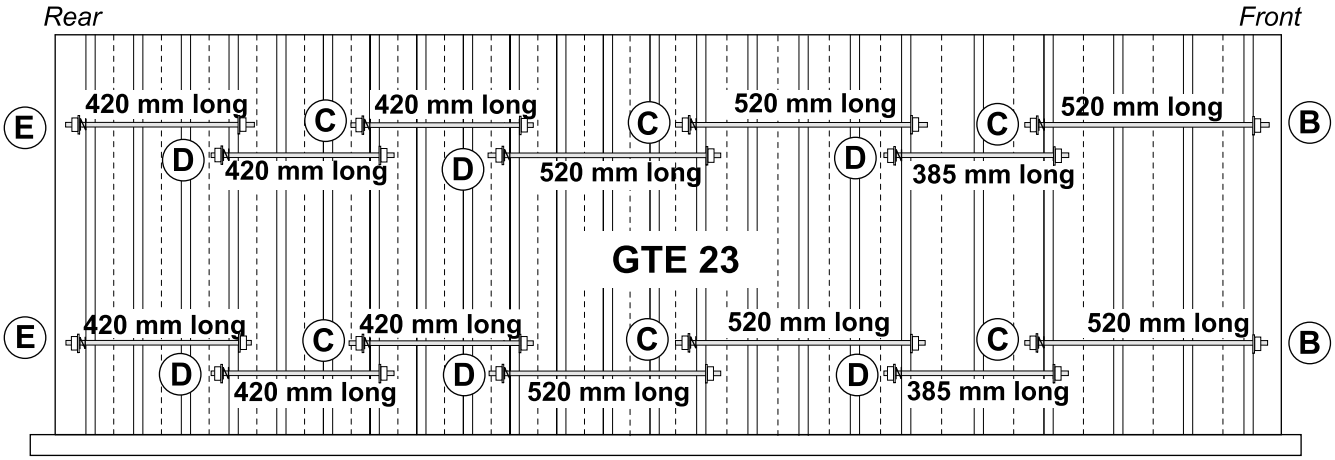
Rear
Front
E
B
C
D
420 mm long
520 mm long
385 mm long
GTE 23

VIS5078

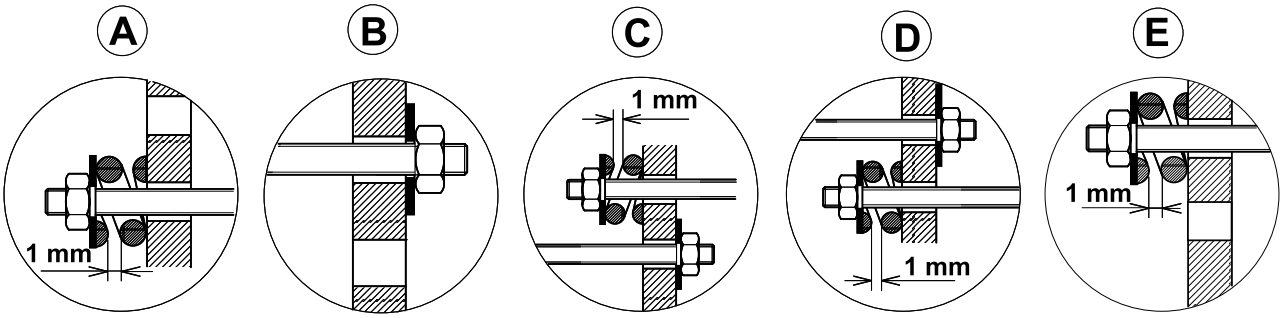
A
B
C
D
E
1 mm
1 mm
1 mm
1 mm

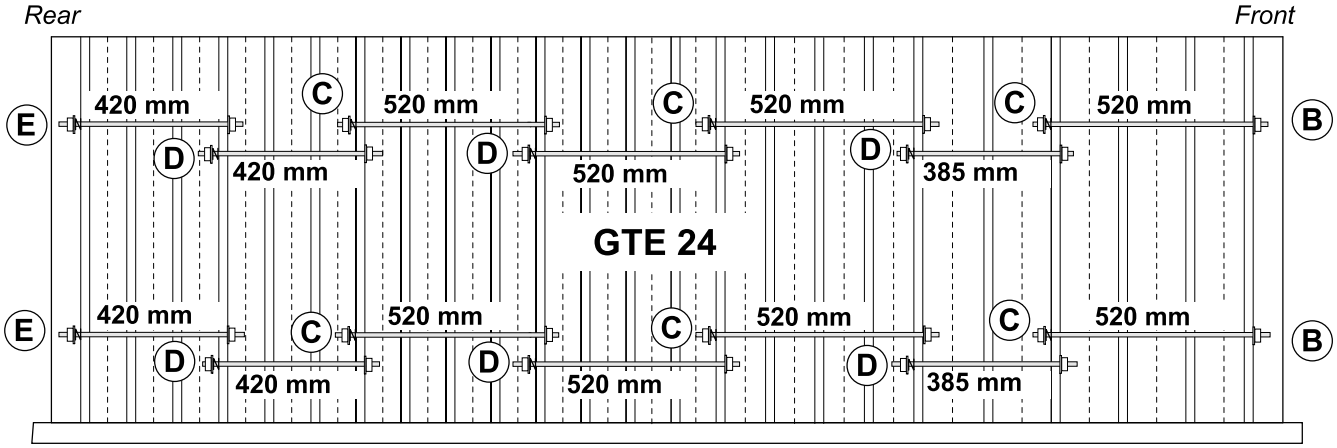
Rear
Front
E
B
C
D
420 mm
520 mm
385 mm
GTE 24

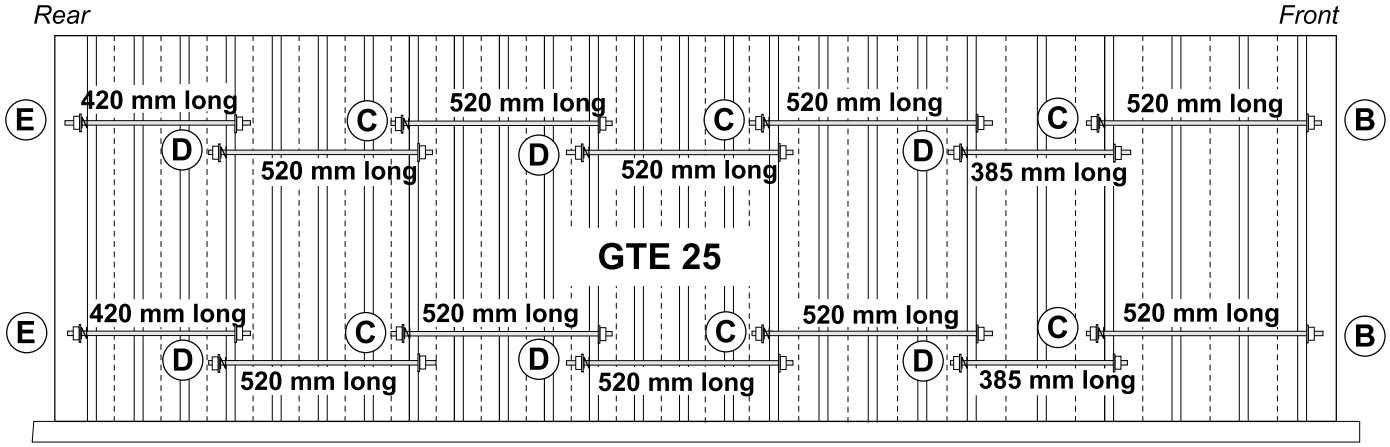
Rear
Front
E
B
C
D
420 mm long
520 mm long
385 mm long
GTE 25

VIS5079

13 Assembling the Baffle Plates

Boiler	GTE 14	GTE 15-19	GTE 20-25
Total number of baffle plates	4	6	8
Package no.	CM23	CM22 + CM23	2xCM23

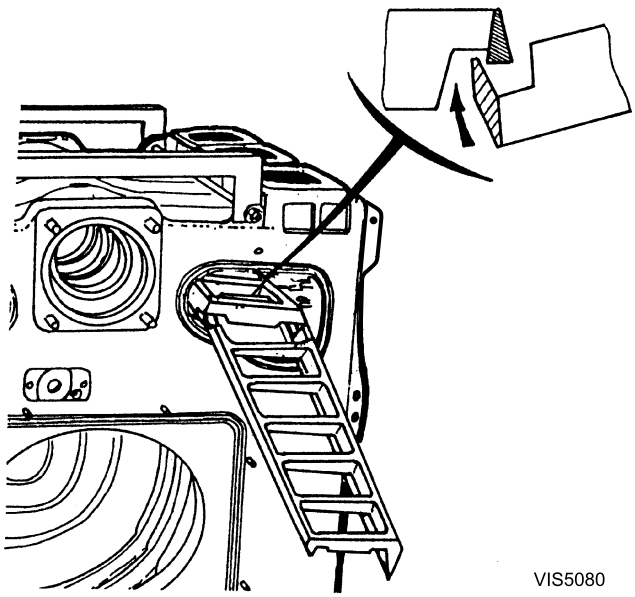

- Put the baffle plates into place in the upper front flue ways, **taking care to interlock them with each other before fitting them.**

14 Assembling the Sweeping Covers

- Clean off the protective varnish on the ground surfaces with solvent.
- The covers are numbered from 1 to 4, and must be fitted with a thermocord ①.

  The length of the thermocord depends upon the cover and is given below.

Type	Thermocord Length
1	1335 mm
2	1110 mm
3	890 mm
4	665 mm

Cover Model	**No 1**	**No 2**	**No 3**	**No 4**
Type of Boiler	Number of sweeping covers per type FRONT ◄ ► REAR			
GTE 14	2		6	
GTE 15	2	4		2
GTE 16	2	4	2	
GTE 17	2	6		
GTE 18	2	2	6	
GTE 19	2	6		2
GTE 20	2	6	2	
GTE 21	2	8		
GTE 22	2	6	2	2
GTE 23	2	6	4	
GTE 24	2	8	2	
GTE 25	2	10		

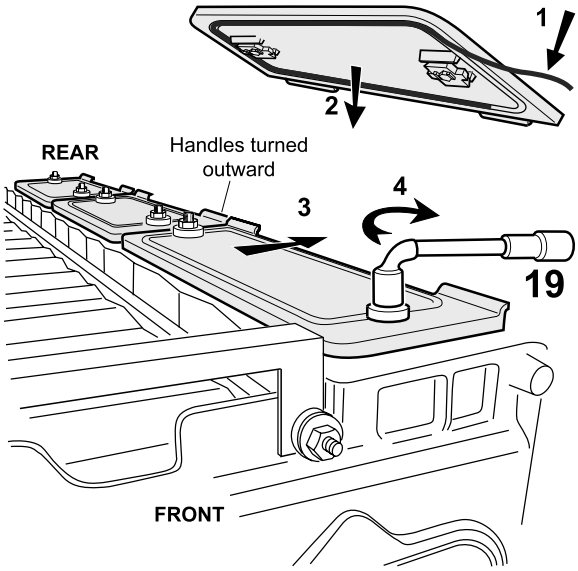

VIS5081

- Place the two no. 1 sweeping covers (with the handles turned outward) on either side of the boiler starting from the front. Distribute the other covers evenly.

⚠ Each cover is fitted with a system whereby it can only be mounted with the handles turned outward.

- Fit the two locks of each cover between the sections.
- Push the cover towards the outside of the boiler, to the "closed" position ①.
- Fasten the two brass nuts of each cover ④.

15

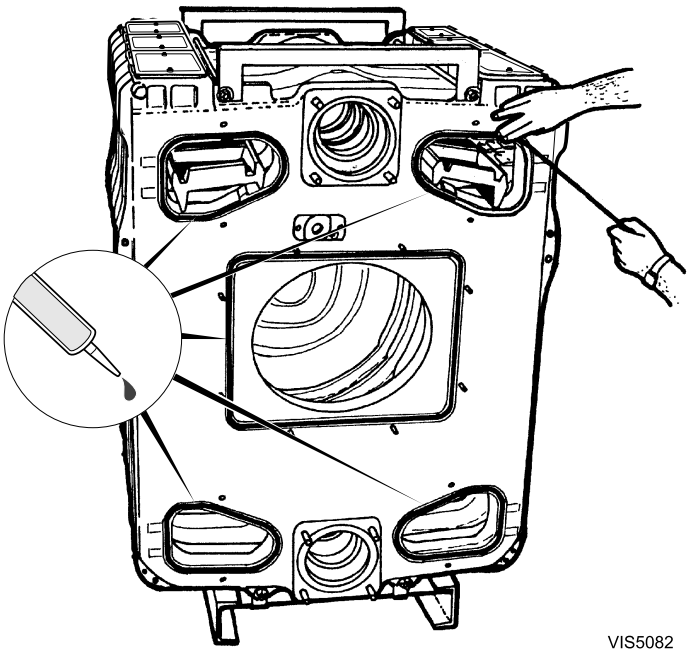

- Insert the thermocord in the sealing groove on each side and hold it in place with a few drops of silicone filler.

16

Front and Rear

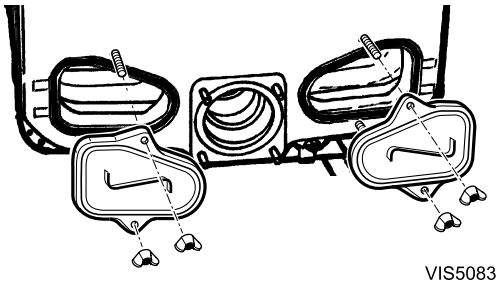

- Insert the thermocord in the sealing groove of the two lower flue ways, on the rear and front of the boiler.
- Put the four trap doors on the lower flue ways and fasten with the wing nuts.

17

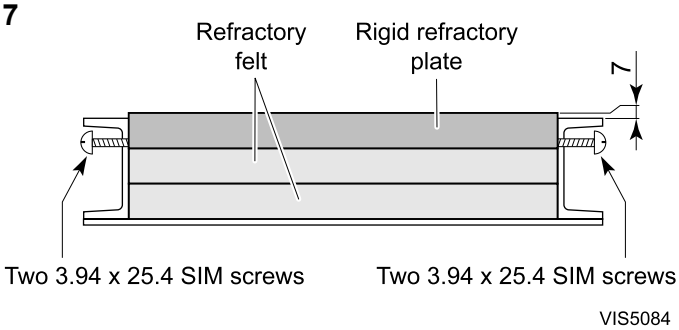

- Put the furnace door insulating material in place and retain it with the four 3.94 x 25.4 SIM screws.

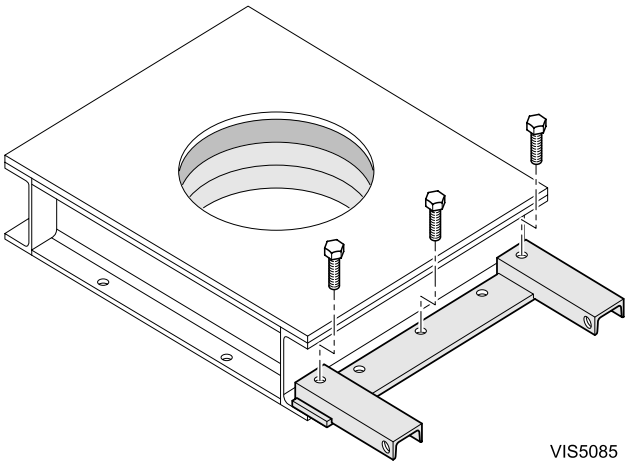

- Place the furnace door on the floor and fasten the articulation onto the door with three HM 12 screws.

18 Installing the Hinge of the Furnace Door

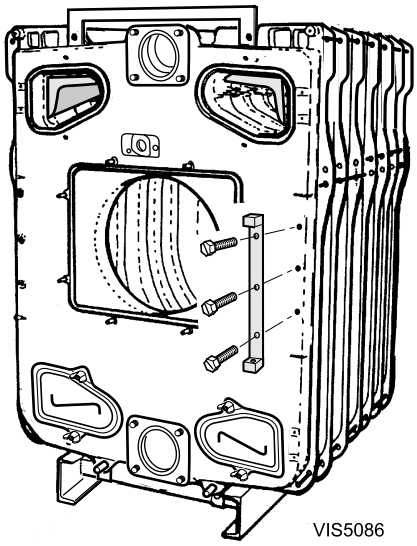

- Fix the furnace door hinge on the right or left-hand side of the front section by means of three H 12 x 25 screws.

19

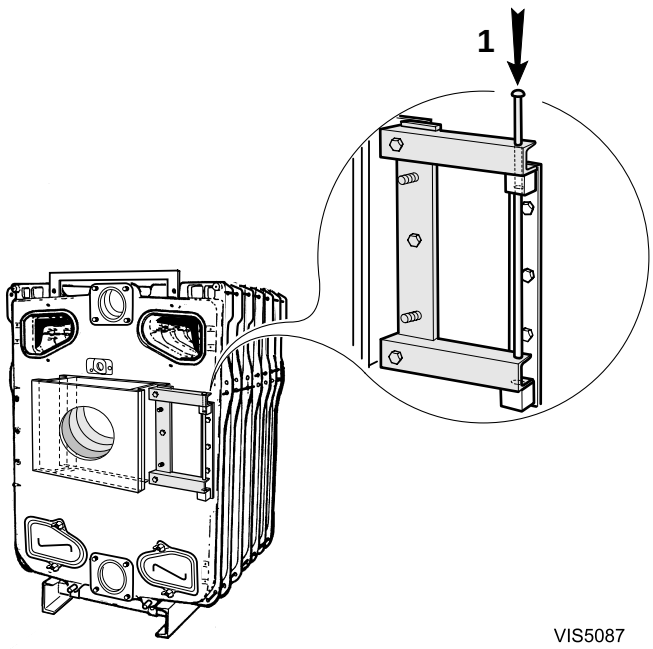

- Fit the door onto the hinge by inserting the pin ①.

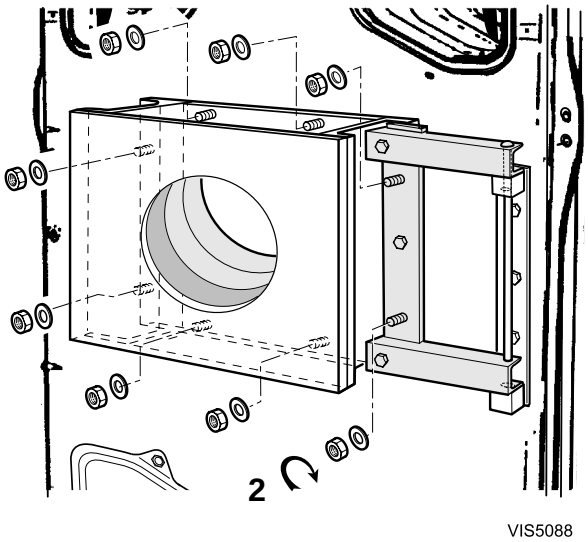

- Close the furnace door on the 8 studs and fasten with 8 washers and nuts ②.

20

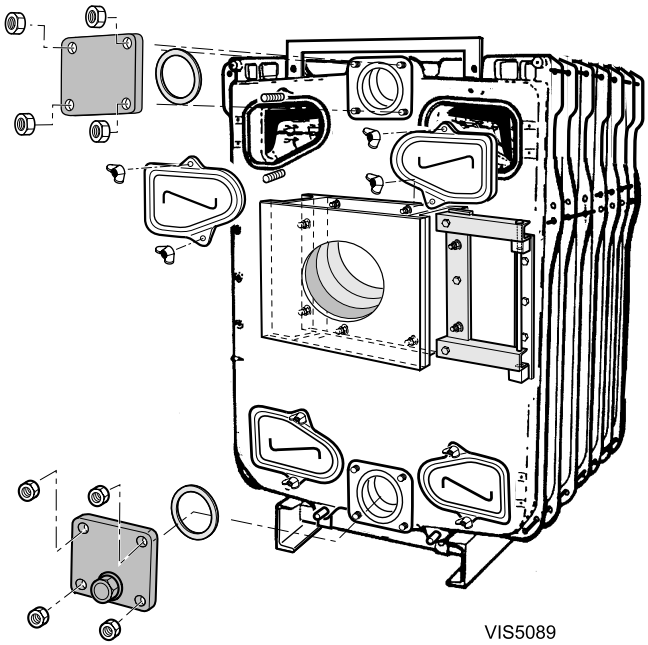

- Fit the two doors of the upper flue ways (wing nuts).
- Fit the plain flange onto the upper connection of the front section (using four H 18 nuts), with the 170 x 222 gasket in between (first soak the gasket in warm water).
- Fit the flange with the sludge removal hole onto the lower connection of the front section (hole in the lower part of the flange) using four H 18 nuts, with the gasket in between (soak in warm water first).

21 Flame Inspection Window

The flame inspection window is fitted with a 1/4" tapped hole for ventilation (optional) :

- if a ventilation system is used, connect the hole to the one provided for that purpose before the burner combustion head.

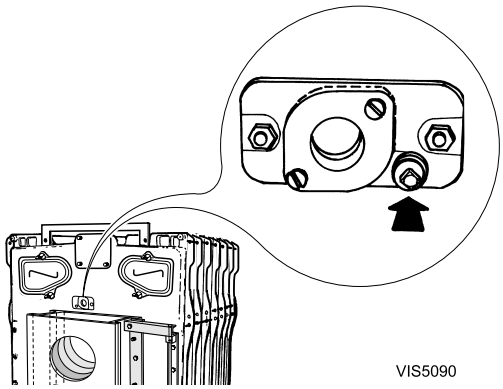

22 Assembling the Return Flange on Boilers GTE 14-25

Boiler Type	L (mm)
GTE 15, 16	380
GTE 17-19	600
GTE 20-22	880
GTE 23-25	1210

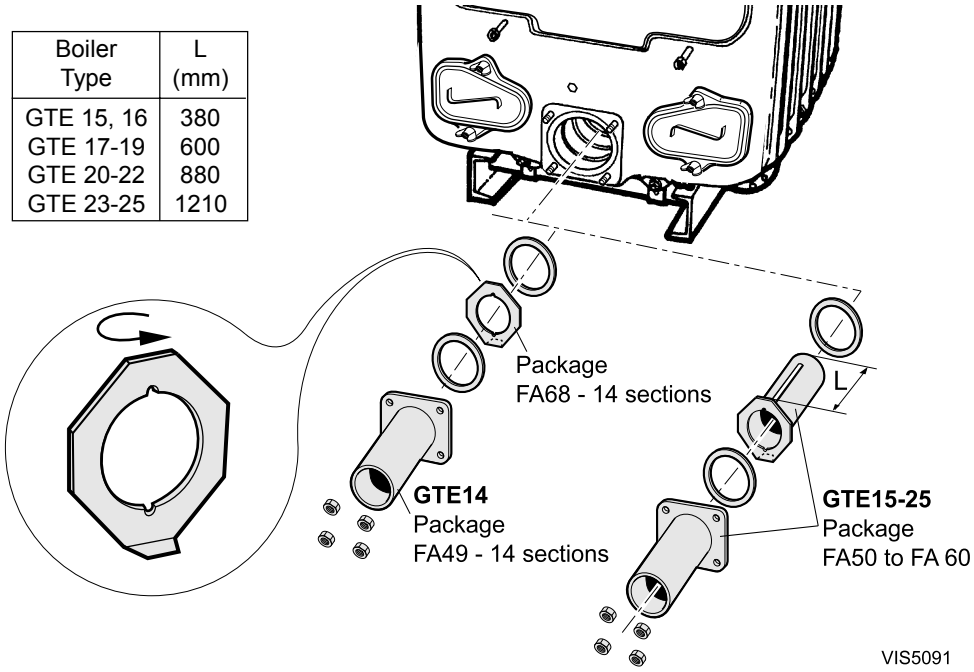

GTE 14:

Fit the water balancing diaphragm with the notches vertical onto the boiler return with a ø 170 x 222 gasket in between (first soak the gasket in warm water).

Fit the heating return flange with a ø 170 x 222 gasket in between and fix it with four H 18 nuts.

GTE 15 - GTE 25 :

Fit the water balancing tube onto the boiler return with a ø170 x 222 gasket in between (first soak the gasket in warm water), using four H 18 nuts.

Fit the heating return flange with a ø 170 x 222 gasket in between (first soak the gasket in warm water) and fix it with four H 18 nuts.

23 Fitting the Boiler Outlet Flange GTE 14 - GTE 25

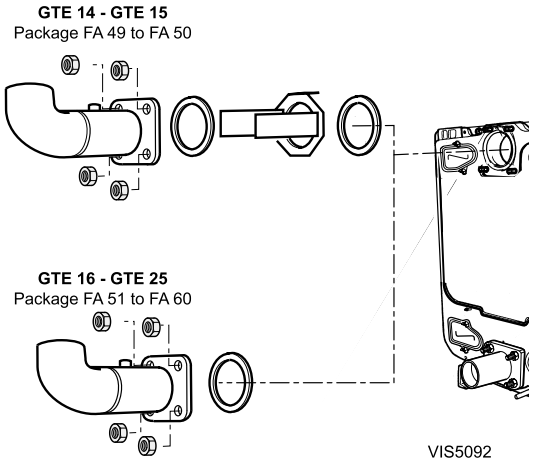

- **GTE 14 - 15 :**

  Place the nozzle turned outside from the boiler with a ø 170 x 222 gasket in between (first soak the seal in warm water).

  Assemble the flange with angled piece so that the angle is turned upward, with a ø 170 x 222 gasket in between (first soak the gasket in warm water) and fasten with four H 18 nuts.

- **GTE 16 - 25 :**

  Assemble the flange with angled piece so that the angle is turned upward, with a ø 170 x 222 gasket in between (first soak the gasket in warm water) and fasten with four H 18 nuts.

24 Fitting the Boiler Outlet Flange

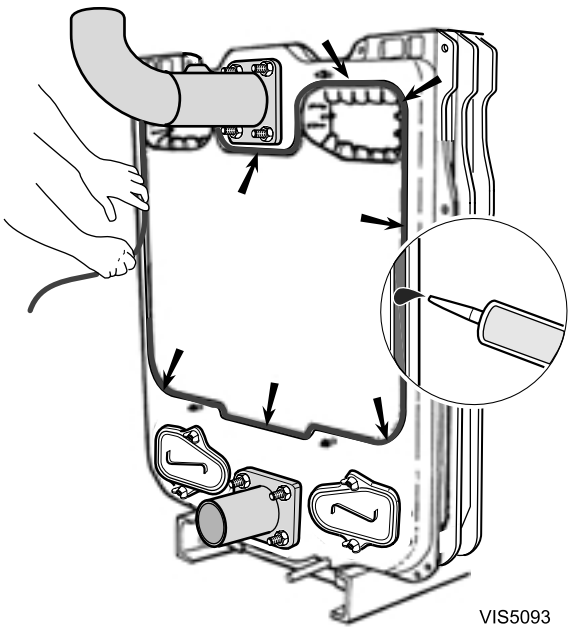

Carefully insert the ø 15 gasket in the groove of the rear section and hold it in place with a few drops of silicone.

25 Before assembling the flue gas box, grease all bolts, studs and screws with high temperature grease (not supplied).

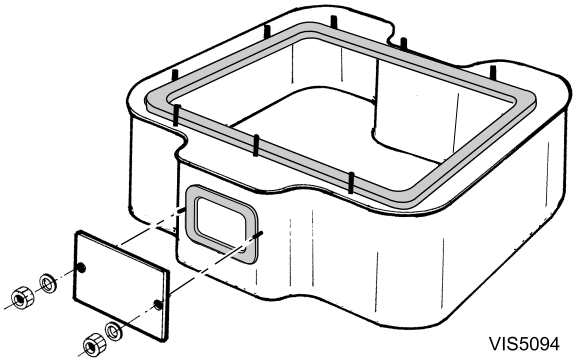

- Put the flat adhesive seal in place on the flue gas box.
- Put the sweeping cover in place and fasten with two H 10 nuts and 10 ø washers.

26 Before assembling the flue gas box, grease all bolts, studs and screws with high temperature grease (not supplied).

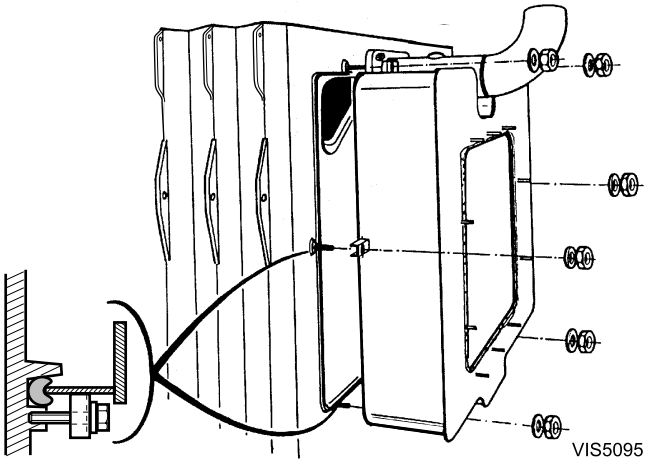

- The flue gas outlet is fastened to the rear by means of six studs, washers and ø 12 nuts.

27

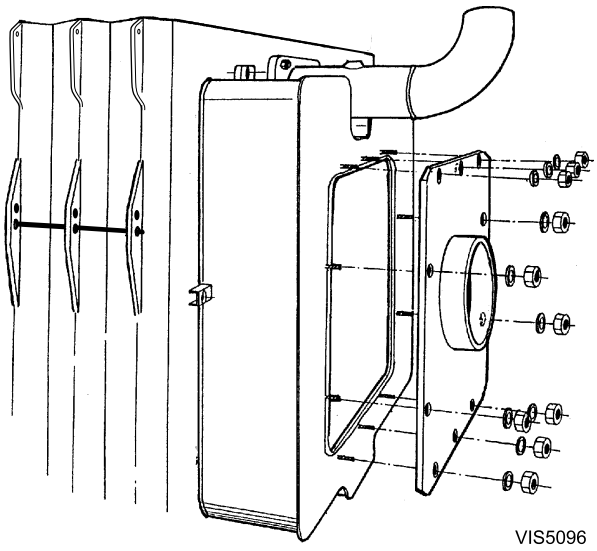

- First adapt the steel connecting plate to the chimney connection flue. Then fasten that plate or the plate with a connecting piece supplied as an option with ten H 10 nuts and ø 10 washers.

28 Assembling the Flow Switch

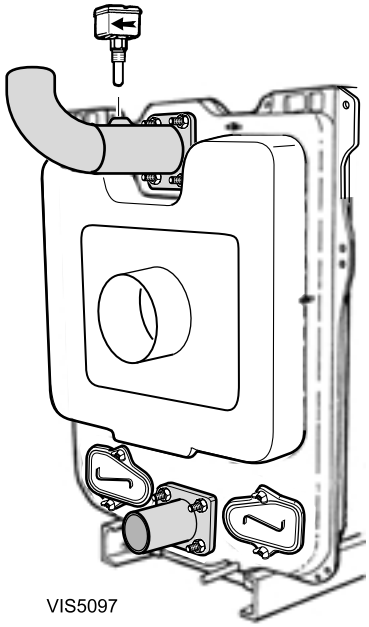

- Screw the flow switch home onto the sleeve. (Package IP514 - 525)

  The direction of the arrow on the casing shows the direction of the flow of water in the pipe.

29 Assembling the baffle plates (for boilers supplied with an assembled body only) **in boilers supplied with an unassembled body, the baffle plates are already in place.**

Boiler	GTE 14	GTE 15 - 19	GTE 20 - 25
Total number of baffle plates	4	6	8
Package no.	CM 23	CM22 + CM23	2xCM23

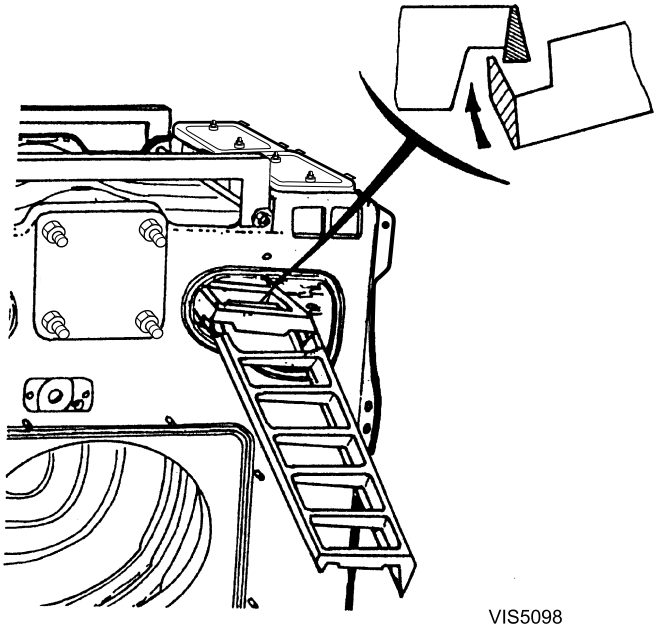

- Put the baffle plates in place in the upper front flue ways, **taking care to interlock them with each other before fitting them.**

30 Assembling the Upper Crosspieces (package FA 5 or FA 6) (for boilers supplied with an assembled body only) **In boilers supplied with an unassembled body, the crosspieces are already in place (see figure 12)**

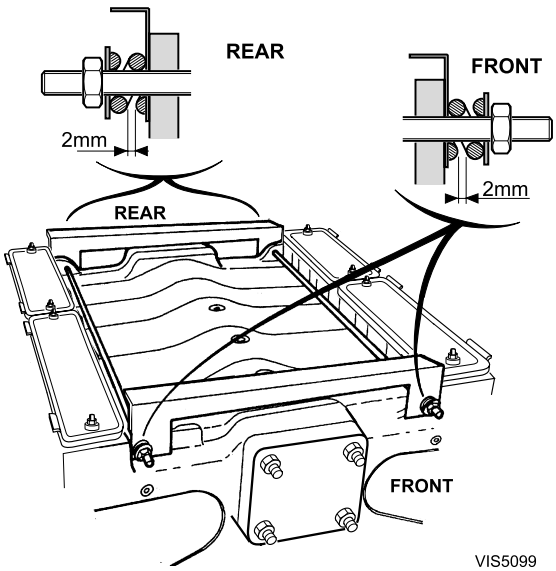

- Mount the two crosspieces and fasten them onto the rods with an expansion spring, a nut and a washer.

31 Assembly the Pocket

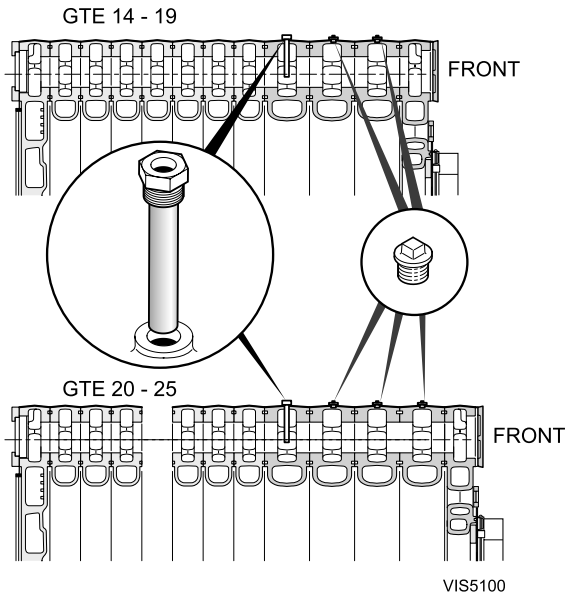

- Assemble the pocket for the thermostats and thermometer in :
  - the third special intermediate section - 150 mm wide, 1/2" hole (GTE 14 - 19)

  or
  - the fourth special intermediate section - 150 mm wide, 1/2" hole (GTE 20 - 25).
- Plug the two (GTE 14 - 19) or three (GTE 20 - 25) free 1/2" holes in the special intermediate sections.

32 Assembling the Cable Channels (14 - 17 sections)

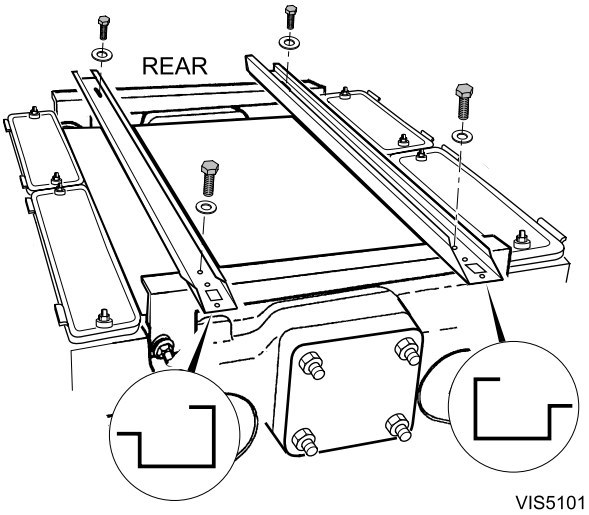

- Place the cable channels so that their bevelled end is to the front.
- Fasten with two H 8 x 16 screws + L8 washers in the third hole starting from the front and opposite the special nut.
- Fasten at the rear with two H8 x 16 screws + L8 washers opposite the oblong holes and special nut.

33 Assembling the Top Insulating Material (14 - 17 sections)

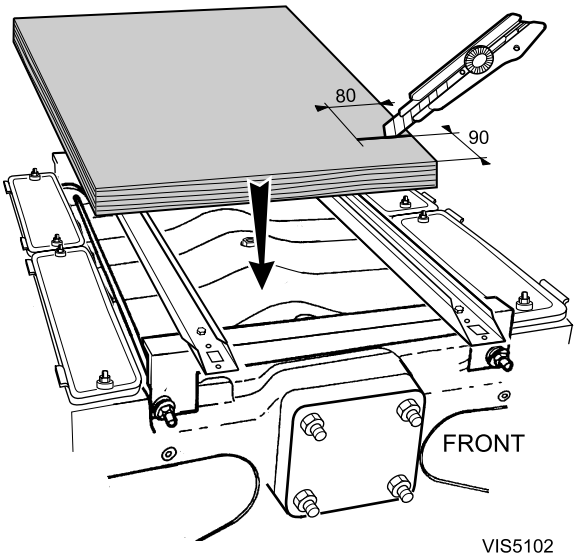

No. of Sections	14	15, 16	17
Length (mm)	1800	2100	2200

- Put in place the 600 mm wide (packages **FA 34 - 36**) top insulating material on the body of the boiler.

34 Assembling the Cable Channels and Crosspieces (18 - 25 sections)

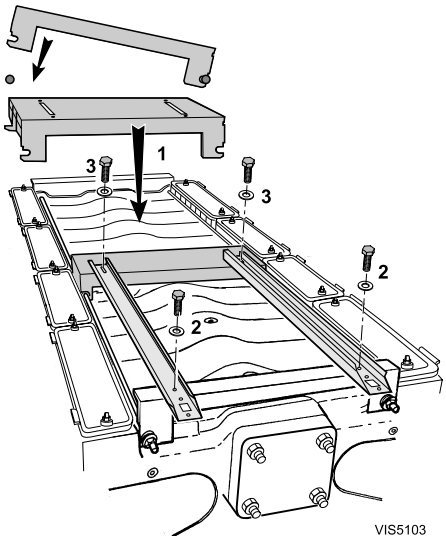

- Assemble the intermediate piece on the assembly rods by fitting one slotted side onto one rod and using the flexibility of the other rod.
- Place the two cable channels so that their bevelled end is to the front.
- Fasten the channels to the front crosspiece with two H 8 x 16 screws + L8 washers in the third hole starting from the front and opposite the special nut.
- Fasten the cable channels on the intermediate piece with two H8 x 16 screws + L8 washers.

35 Assembling the Additional Cable Channels (18 - 25 Sections)

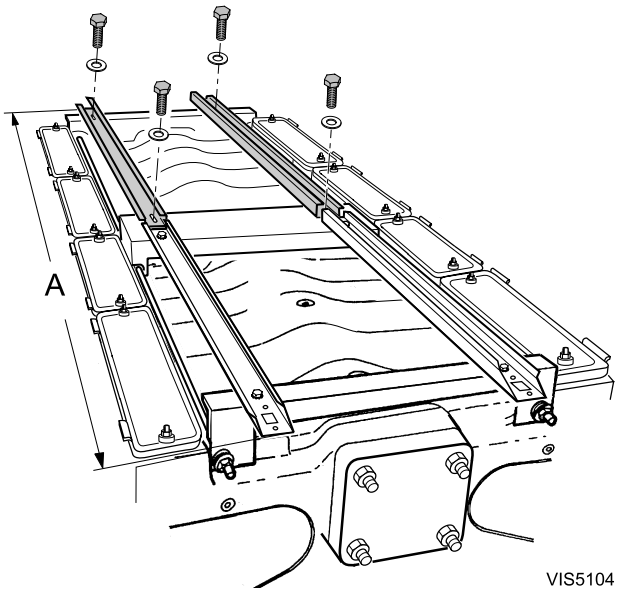

No. of Sections	18	19	20	21	22	23	24	25
A (mm)	2510	2600	2800	2910	3000	3110	3200	3310

- Align the two additional cable channels with the two others.
- Fasten them to the intermediate piece and the rear crosspieces with four H 8 x 16 screws and L8 washers.

36 Assembling the Top Insulating Material (18 - 25 sections)

- Put in place the two 600 mm wide (packages **FA 37** - **41**) pieces of insulating material on the body of the boiler.
- Push the insulating material under the front and rear crosspieces.

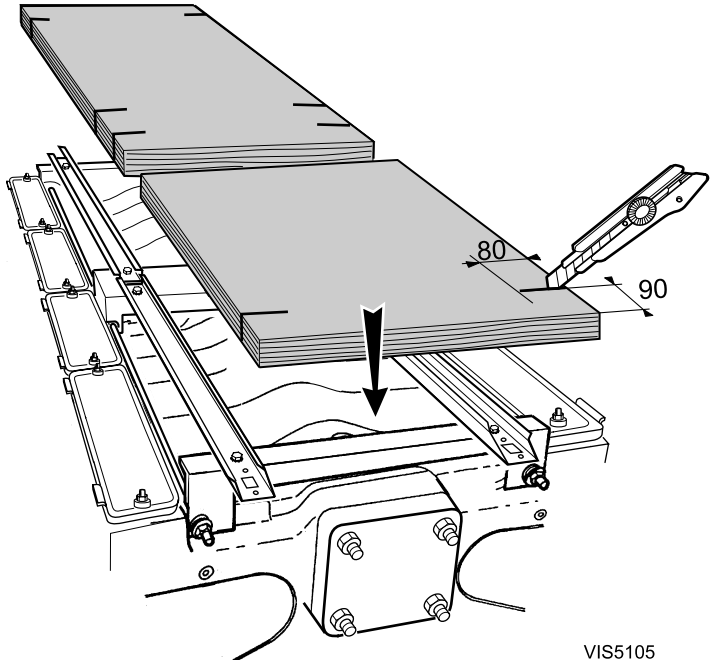

No. of Sections	18	19	20	21	22	23	24	25
Length (mm)	2 x 1200	2 x 1200	2 x 1300	2 x 1400	2 x 1400	2 x 1500	2 x 1500	2 x 1600

37 Assembling the Casing Positioning Brackets

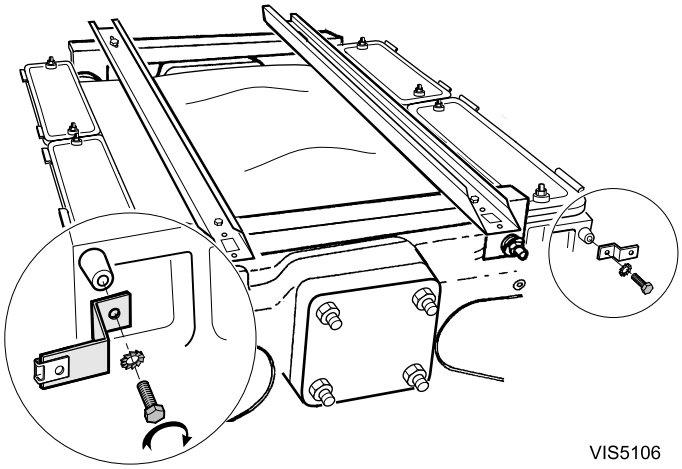

- Fasten the positioning brackets (package **FA5 or FA6)** onto the right and left-hand upper bosses of the front section with two H 8x16 screws and two serrated washers (13 mm spanner).

38 Assembling the Lower Rail Support Brackets

Example : GTE 14

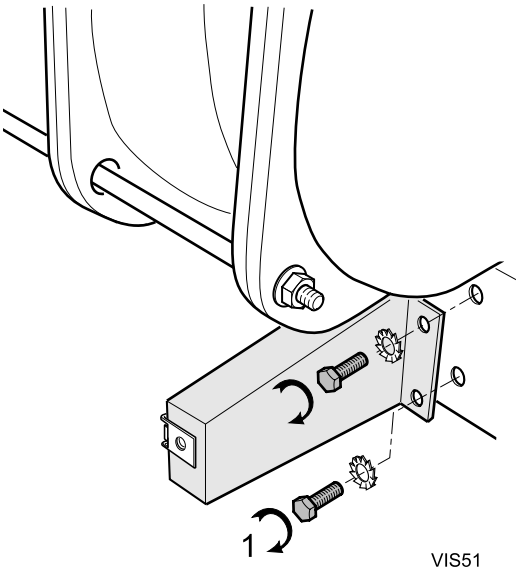

- Fasten the lower rail support brackets using H8 x 16 screws.

Note: for the assembly direction, see the drawings below.

Assembly Direction of Lower Rail Support Brackets
(seen from the top of the frame)

38a

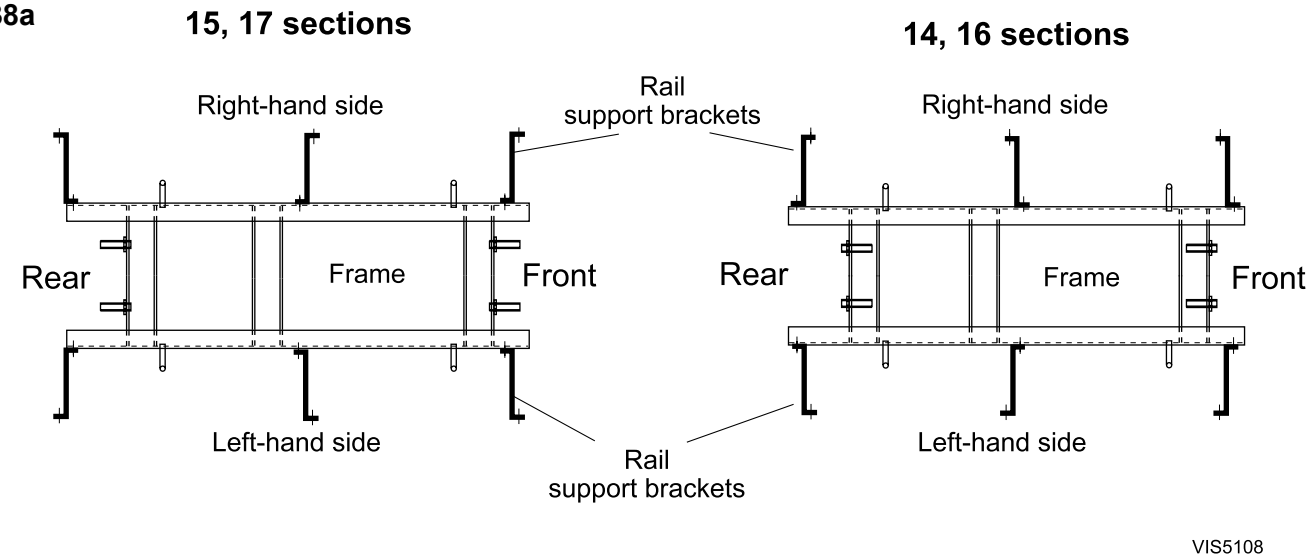

38b

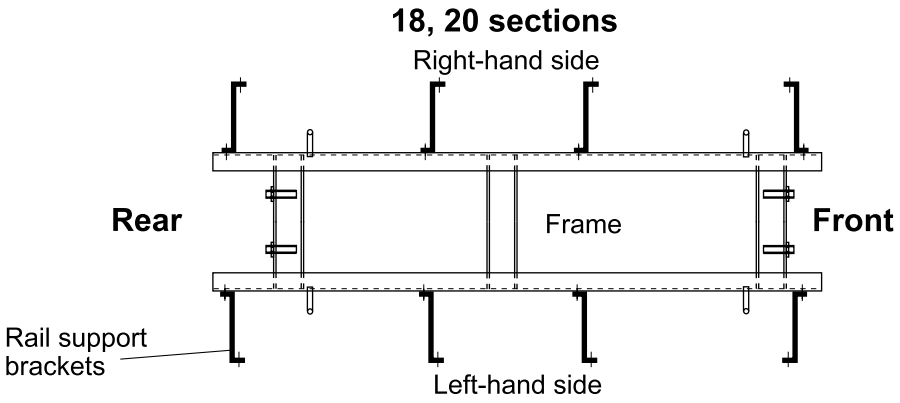

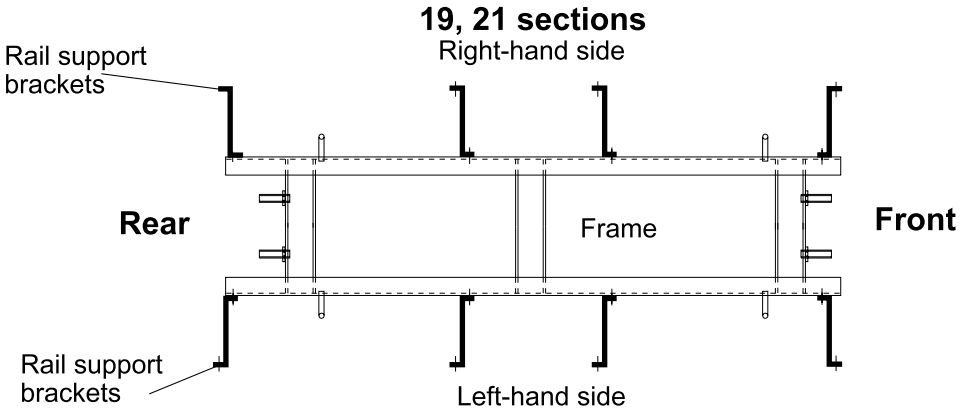

Note: *two lower rail support brackets and two upper rail brackets are left unused with 18, 19, 20 and 21 sections.*

38c

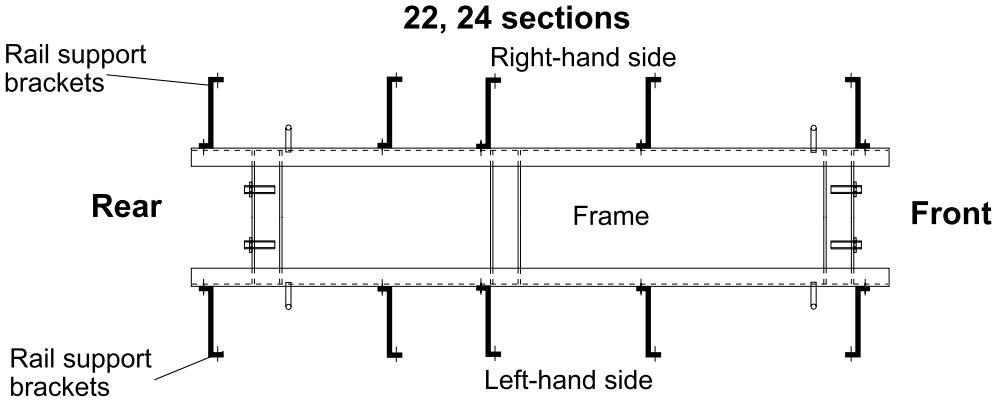

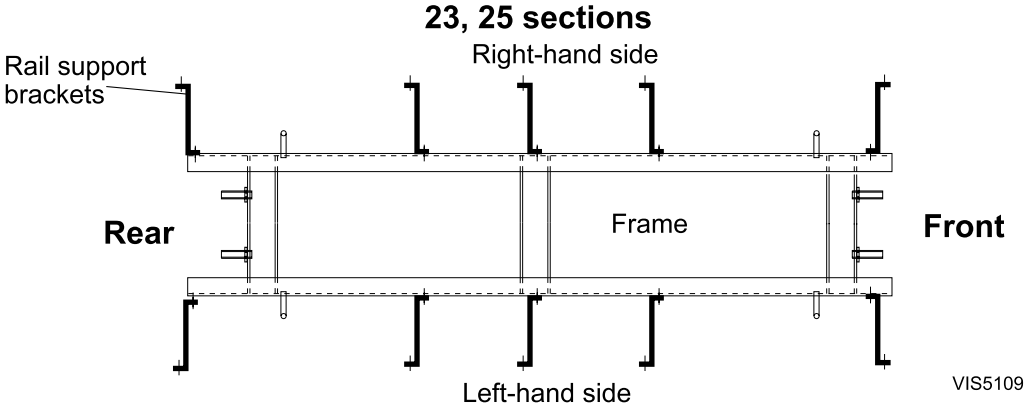

39

- Fasten the lower rail with H 8x30 screws and L8 washers.
- The other rail support brackets are fastened opposite the holes provided on the lower rail.

Length required while assembling the two-piece rails (boilers with 18 - 25 sections) (see fig. 42)

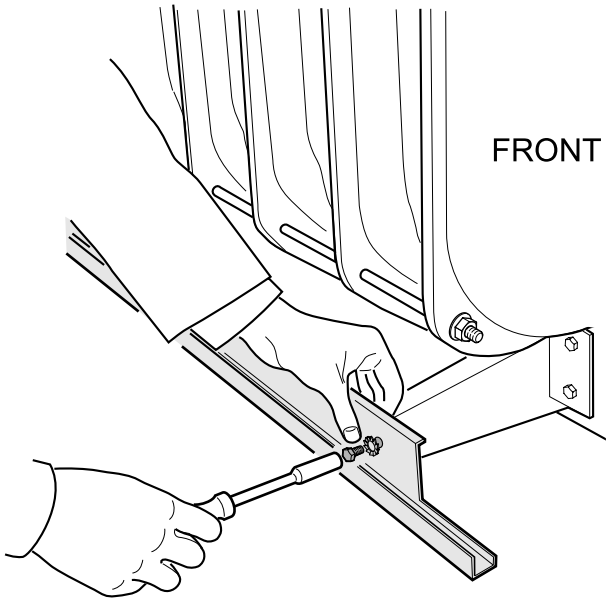

VIS5110

40 Assembly Direction of Lower Rail Support Brackets (seen from the top of the frame)

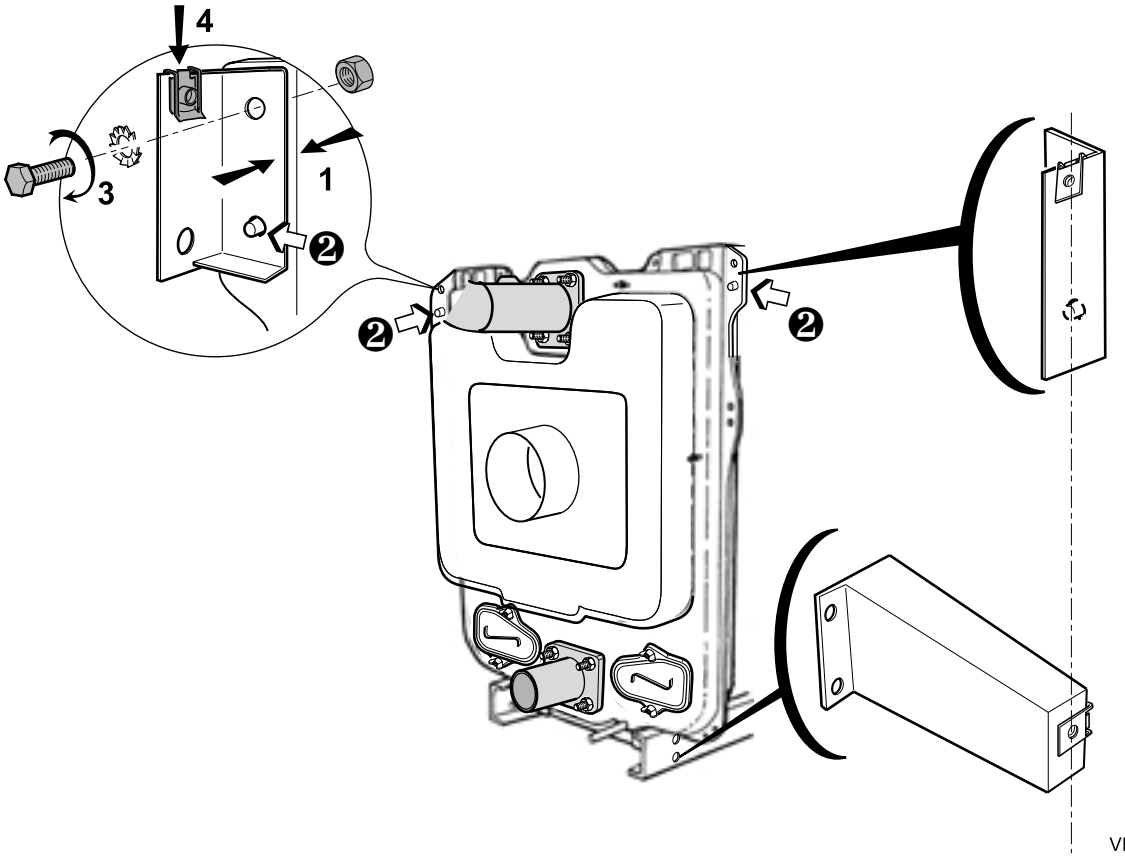

VIS5111

- Fix the fastening bracket of the upper rails (package **FA5 or FA**6) on the upper lug ① **(these brackets must be vertically aligned with the lower rail support brackets)**.

Fit the bracket onto the stub ②.

- Fasten with H 10x50 screws and serrated washers and H10 nuts ③.
- Assemble the Rapid nut on the top of the bracket ④with the tapped shaft on the inside.

41 Installing the Insulating Material

Type of Boiler	FRONT ◄ Side insulating material (length in mm) ► REAR			
GTE 14	1200	600		
GTE 15	1200	400	400	
GTE 16	1200	400	600	
GTE 17	1200	400	600	
GTE 18	1200	1200		
GTE 19	1200	1200		
GTE 20	1200	400	400	600
GTE 21	1200	400	1200	
GTE 22	1200	400	1200	
GTE 23	1200	600	1200	
GTE 24	1200	600	1200	
GTE 25	1200	400	400	1200

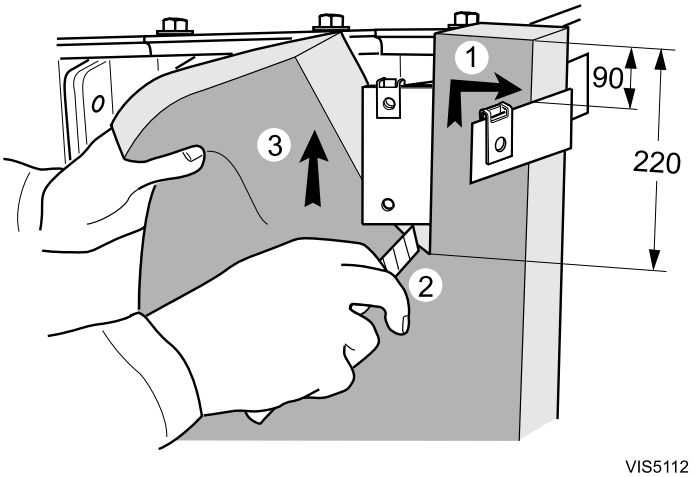

- Place the side insulating material against the positioning bracket ① and cut it so that it is flush with the upper lug on which the rail fastening bracket is fixed, along a 220 mm length ②.
- ③ Push the insulating material in behind the lug and the rail fastening bracket.
- Distribute the insulating material evenly so that you have the same side insulating material on either side of the boiler.
- Cut the material similarly along the fastening brackets.

42

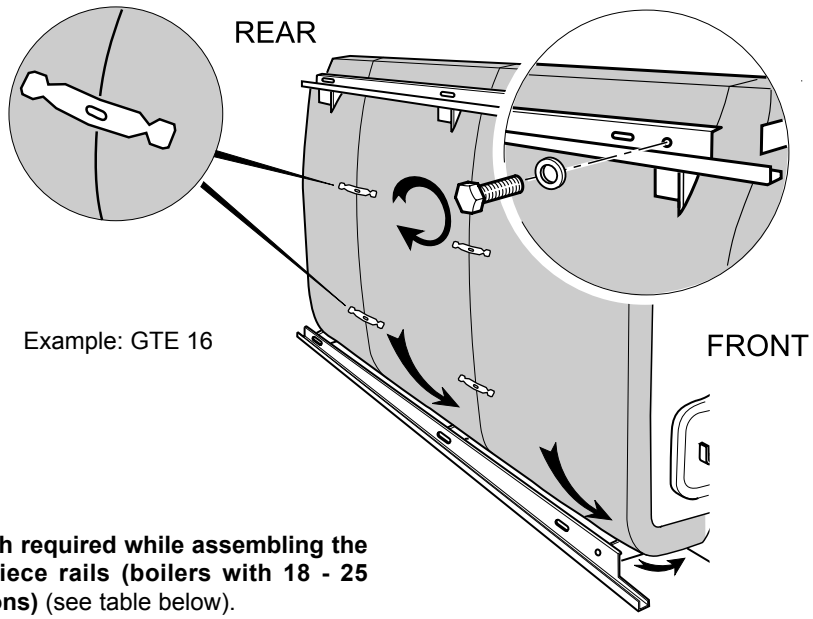

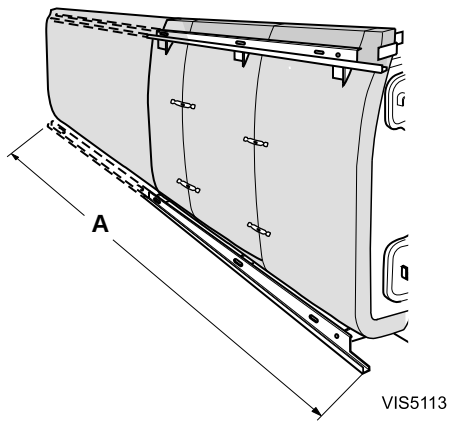

Length required while assembling the two-piece rails (boilers with 18 - 25 sections) (see table below).

14 - 17 sections

- Fix the upper rail with H8 x 30 screws and L8 washers (the first hole from the front end of the rail must be opposite the first fastening bracket, and similarly with the other brackets).
- Push the insulating material behind the lower rail and underneath the boiler.
- Join the pieces of insulating material to each other with the clips.

18 - 25 sections

- Fix the upper rail with H8 x 30 screws and L8 washers (the first hole from the front end of the rail must be opposite the first fastening bracket, and similarly with the other brackets).
- Fix the additional upper and lower rails, making sure you comply with dimension A (see table below).
- Push the insulating material behind the lower rail and underneath the boiler. Join the pieces of insulating material to each other with the clips.

No. of Sections	18	19	20	21	22	23	24	25
A (mm)	2500	2615	2765	2875	2965	3075	3165	3275

43 Assembling the Side Casing Panels

Length and arrangement of panels for the boiler model

Type of Boiler	FRONT → REAR Side Panels Length in mm				
GTE 14	800	600	600		
GTE 15	940	600	600		
GTE 16	1050	600	600		
GTE 17	940	600	400	400	
GTE 18	1050	600	400	400	
GTE 19	940	600	600	400	
GTE 20	940	600	600	600	
GTE 21	1050	600	600	600	
GTE 22	940	600	600	400	400
GTE 23	1050	600	600	400	400
GTE 24	940	600	600	600	400
GTE 25	1050	600	600	600	400

400 mm long panel in Package FA 10
600 mm long panel in Package FA 11
800 mm long panel in Package FA 7
940 mm long panel in Package FA 8
1050 mm long panel in Package FA 9

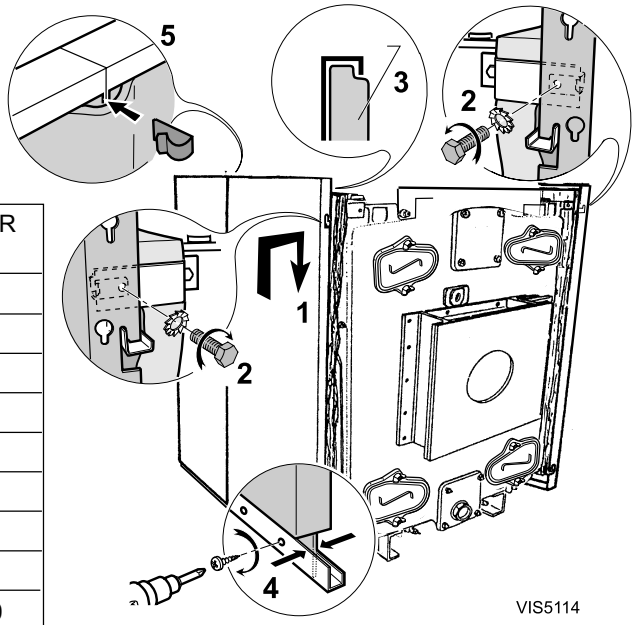

- **First assemble the panels on the front** using the assembly length table opposite and continue up to the rear section ①.
- **Fix the front side panels** to the positioning brackets with H 8 x 16 screws and serrated washers ②.
- Push the insulating material into the top of the side panels and fasten the panels ③ to the lower rails by means of the self-tapping screws with the electric screwdriver (2 screws per panel)④.
- Fasten the side panels to each other with the clips ⑤.

44 Assembling the Furnace Door and Lower Crosspiece Panels

- Put the **furnace door panel** in place (package **FA5 or FA**6) and fasten with two ø 3.94 x 12.7 tapping screws. The furnace door panel may be cut in two at the micro-joints.
- Fit two Rapid nuts in the bottom of the front side panels.
- Fix **the casing support lower crosspiece** (package **FA5 or FA**6) by means of two H 6x20 screws and two serrated washers.

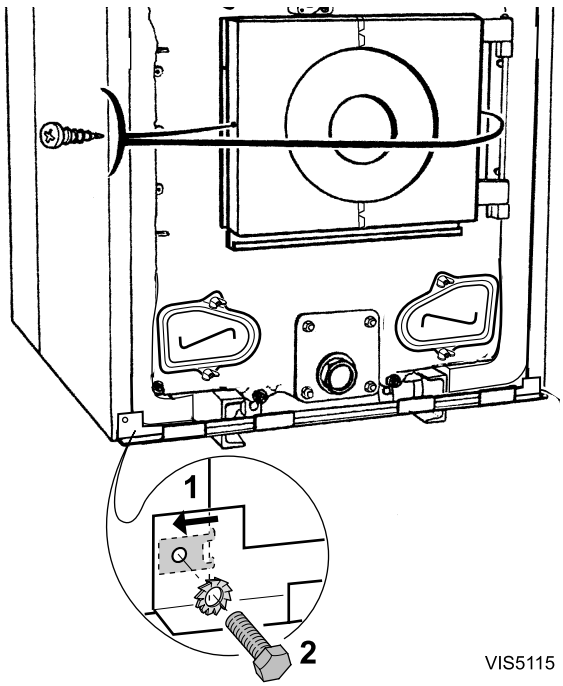

45 Assembling the Control Panel Bracket (all control panels)

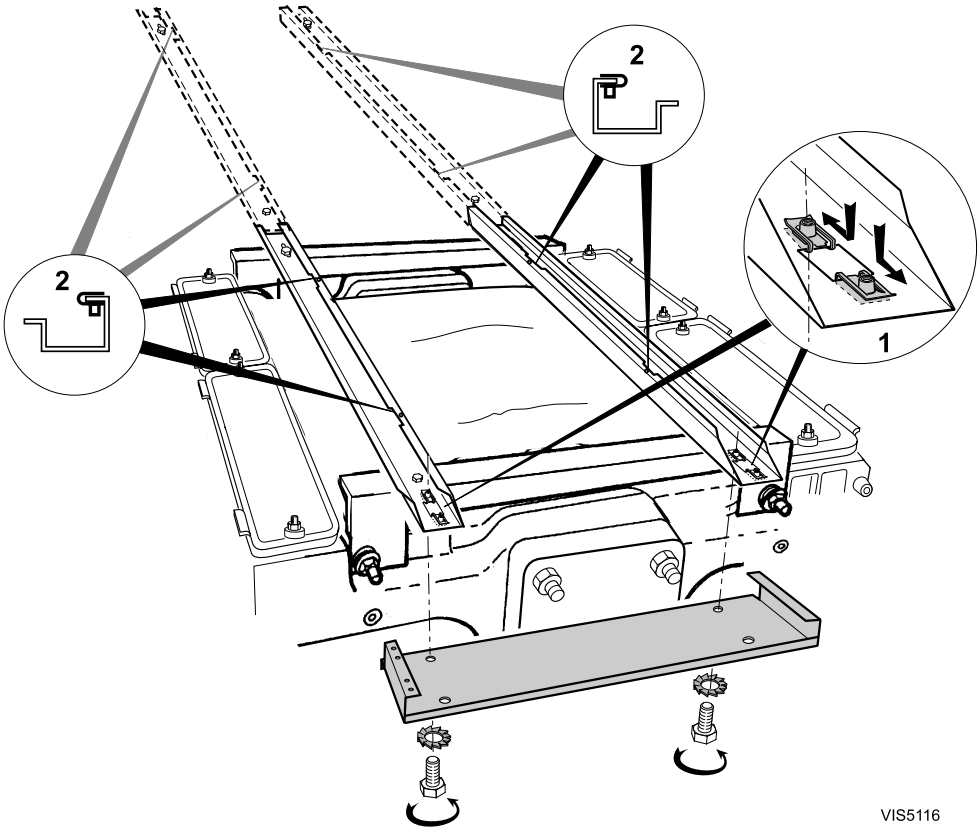

- Fit the four “Rapid nuts” on the front of the cable channels ①.
- Fit the Rapid nuts in the slots ②:
  - 4 Rapid nuts for 7-17 sections,
  - 8 Rapid nuts for 18-25 sections.
- Fix **the control panel** bracket (package **FA5 or FA**6) underneath the two cable channels by means of two H 8x 16 screws and two serrated washers.

46 Standard Control Panel

(Go directly to Figure 50 for the De Luxe Control Panel)

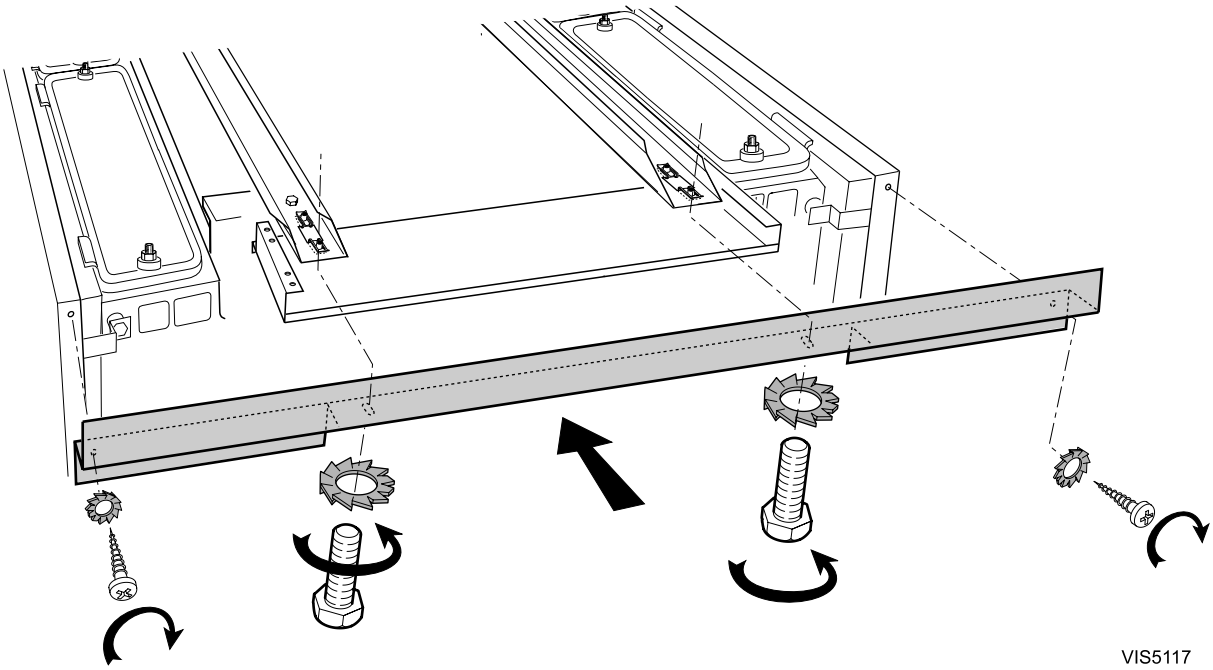

- Place the front crosspiece underneath the control panel bracket and fasten from below with H8 x 30 screws and serrated washers.
- Fix to the side panels with two ø 3.94 x 12.7 tapping screws and serrated washers

47 Installing the Standard Control Panel

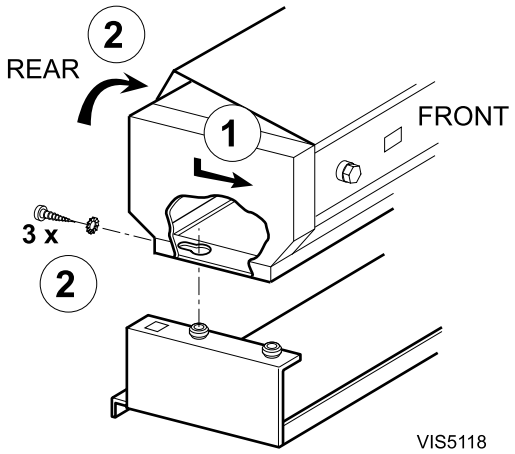

- Position the control panel on the rear studs ①.
- Open the control panel (3 screws at the back) ②.

48 Standard Control Panel

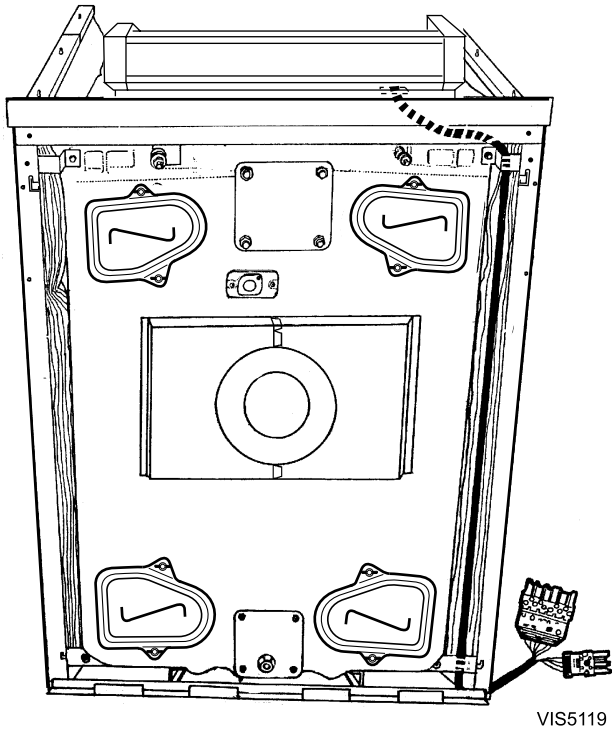

- Bring the burner cable behind the casing support and down to the burner between the side panel and insulating material.

49 Standard Control Panel

- Fasten the control panel to the panel base with two ø 3.94 x 25 tapping screws and serrated washers ①.
- Carefully unroll the various bulbs and bring them out of the control panel through the opening designed for that purpose. Cut out the top insulating material and insert the bulbs in the boiler pocket and hold them in place using the spring ②.
- Fasten **rear cover H** (package **FA5 or FA6**) to the control panel bracket using two EC CB 4 x 40 screws and serrated washers ③.
- Make the **electrical connections** to the two terminal blocks provided for this purpose inside of the control panel. See the “Electrical Connections” section of the instructions (Section 7, page 41).
- Close the control panel.

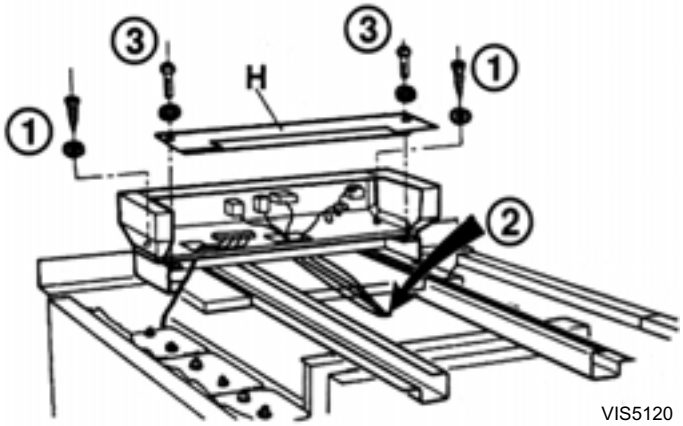

50 De Luxe Control Panel

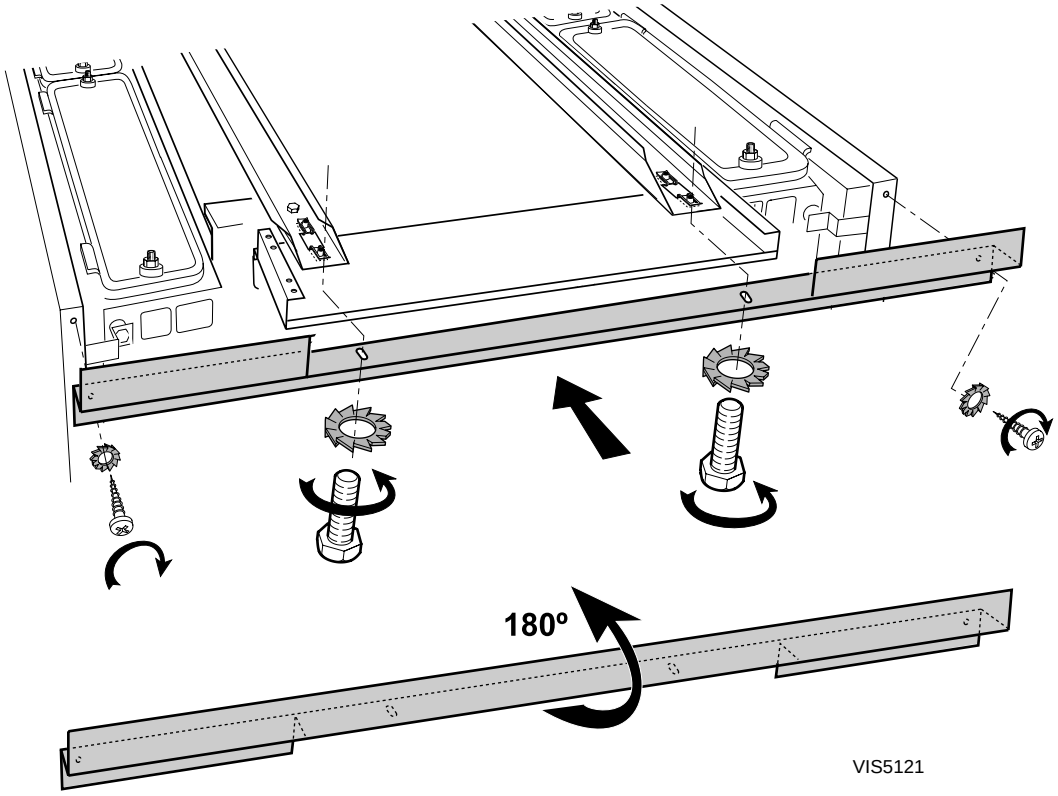

Take the front crosspiece and turn it by 180º in relation to the position for standard control panels (see fig. 46) and fasten it just like the standard control panel.

51 Fitting the De Luxe Control Panel

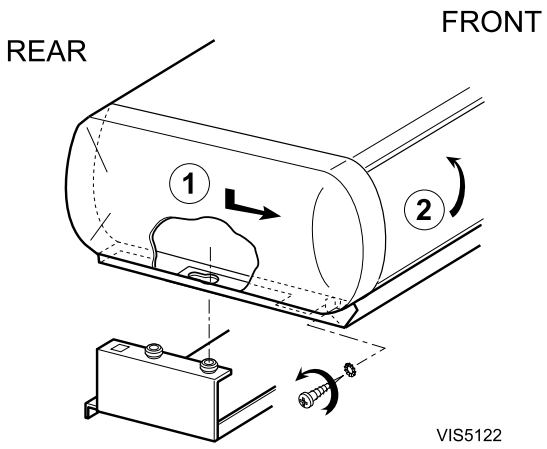

① Position the control panel on the front studs.

② Open the control panel (two screws on the side).

52 De Luxe Control Panel

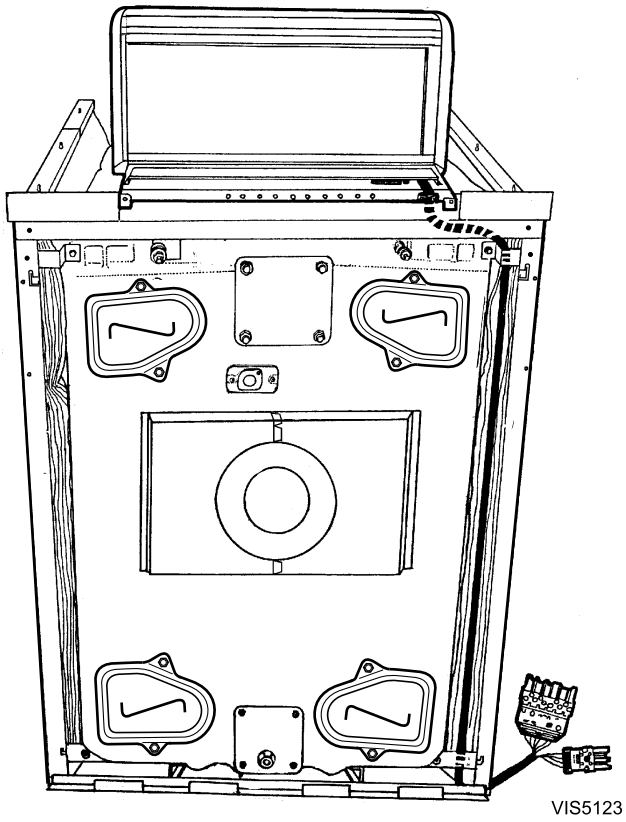

- Bring the **burner cable** behind the casing support and down to the burner between the side panel and insulating material.

53 Installing bulbs of De Luxe Control Panels

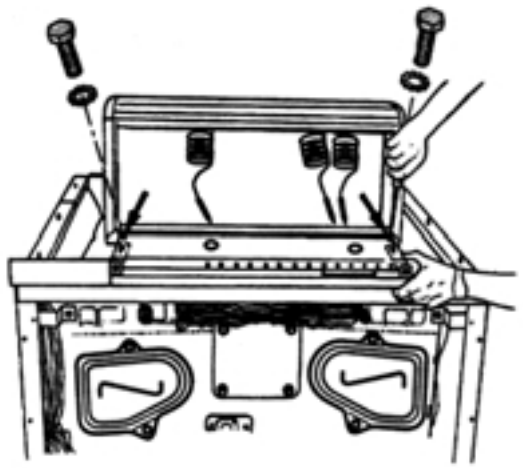

VIS5124

- Fix the control panel to the rear of the control panel bracket using two H ø 4 x 40 screws and serrated washers.
- Carefully unroll the various bulbs and bring them out of the control panel through the opening in the bottom on the panel.

54 Installing bulbs of De Luxe Control Panels

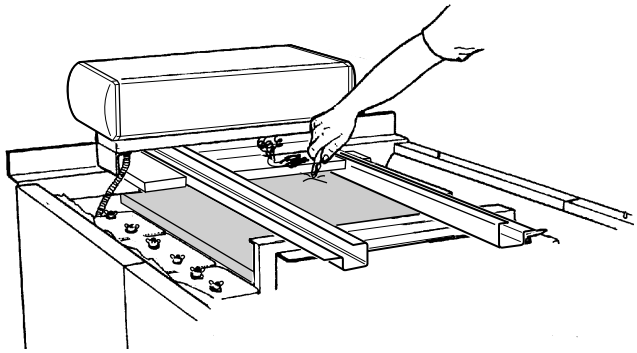

VIS5125

- Cut out the top insulating material to free the boiler pocket. Then, insert the bulbs inside the pocket and maintain them with the spring.

55

- Make the **electrical connections** to the terminal blocks provided for this purpose inside of the control panel.

See the “Electrical Connections” section of the instructions supplied (Section 7.2, page 47).

56 Putting in place the Insulating Material for De Luxe Control Panels

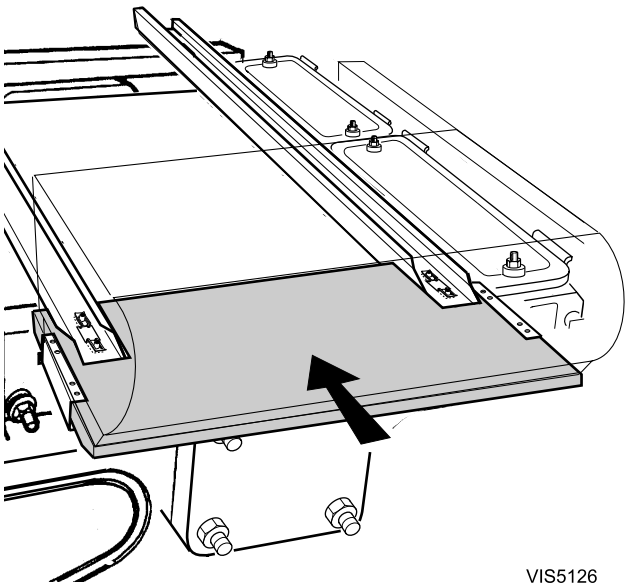

VIS5126

- Put in place the insulating material as shown above.

57

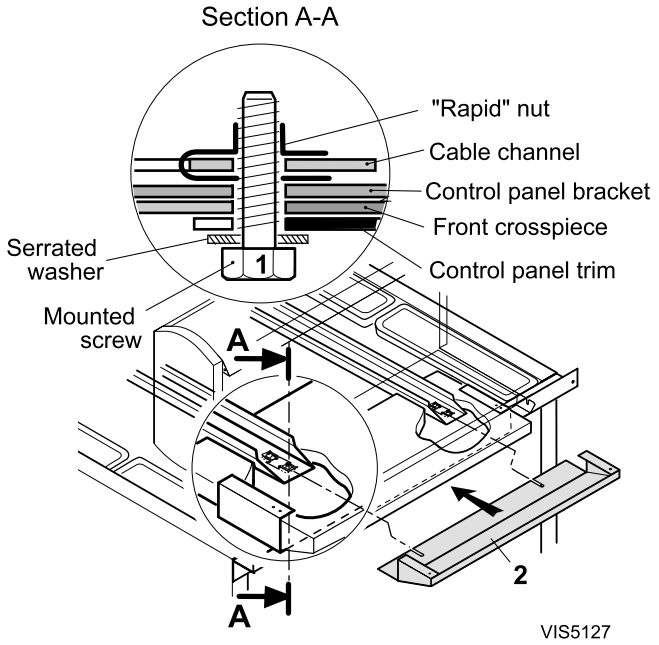

- Unfasten the screws ① (mounted in fig. **50**)
- Slide the control panel trim ② along the screws ①.
- Fasten the screws ①.

58

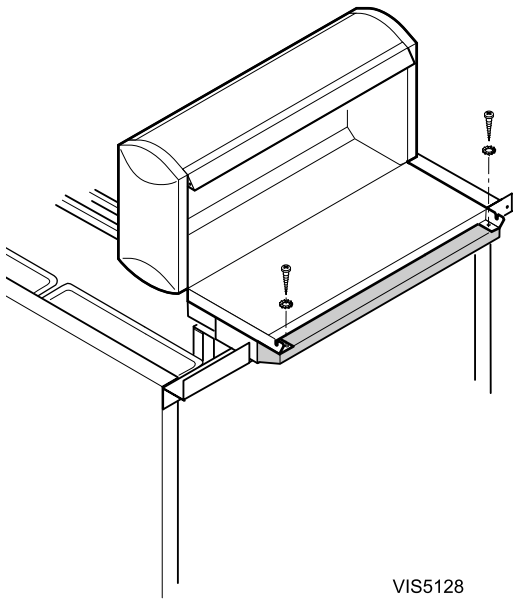

- Fix the trim to the control panel using two tapping screws and serrated washers.

59

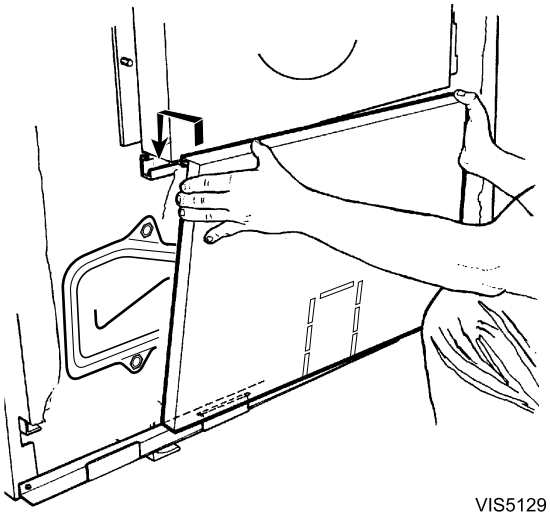

- Place the insulating material in the lower central front panel (black cloth facing outward).
- Fit **the lower central front panel** (package **FA5 or FA6**) onto the lower front crosspiece and fix it to the furnace door panel.

60

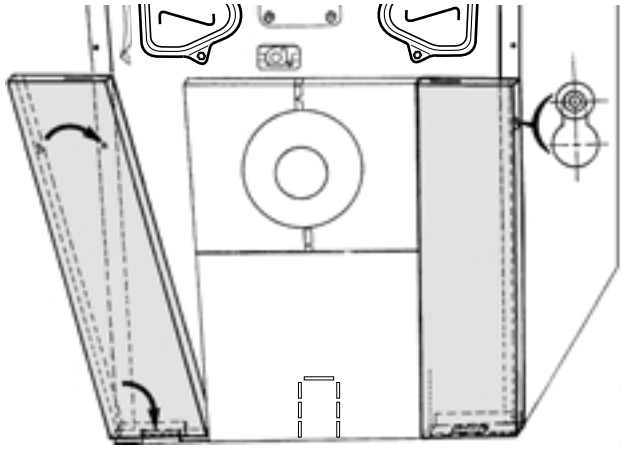

- Fit **the left and right-hand side front panels** (package **FA5 or FA6**) onto the lower front crosspiece and fit them onto the studs of the side panels.

61

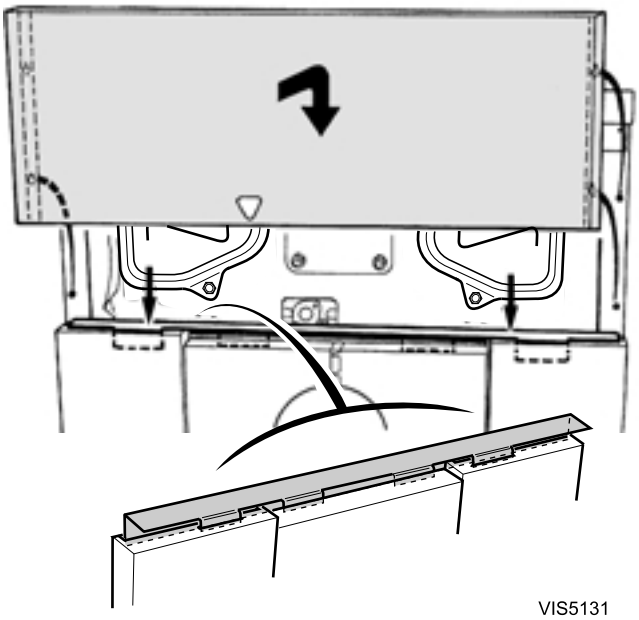

- Place **the retaining crosspiece** (package **FA5 or FA6**) **on the left and right-hand front panel**s, taking care to place the two central tabs **behind** the furnace door panel.
- Fit **the upper front panel** (package **FA5 or FA6**) onto **the side panels** via the four studs.

62

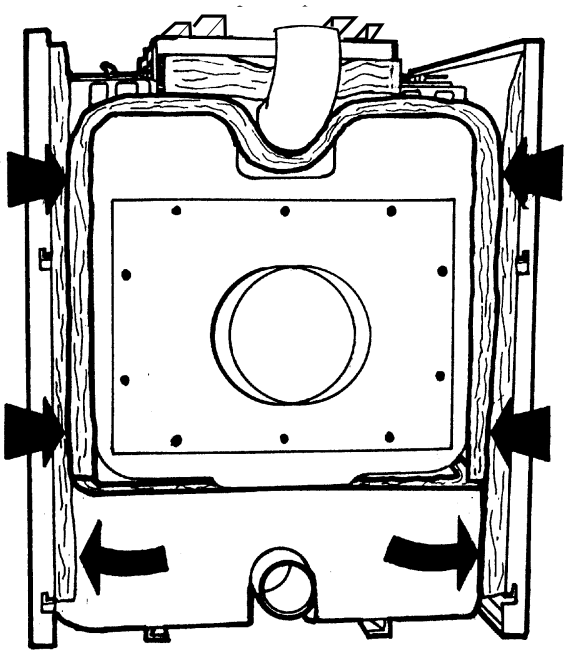

- Put in place the **insulation of the flue gas box and the lower rear insulating material** (package **FA5 or FA6**).

63

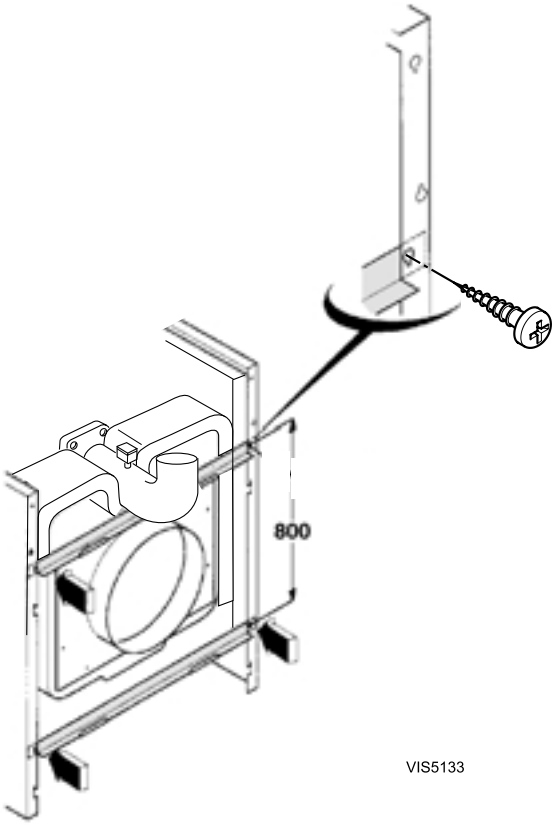

- Put in place the **two rear crosspieces** (package **FA5 or FA6**) behind the bend of the rear side panels and fasten each crosspiece to the side panels using two ø 3.94 x 12.7 screws.

64

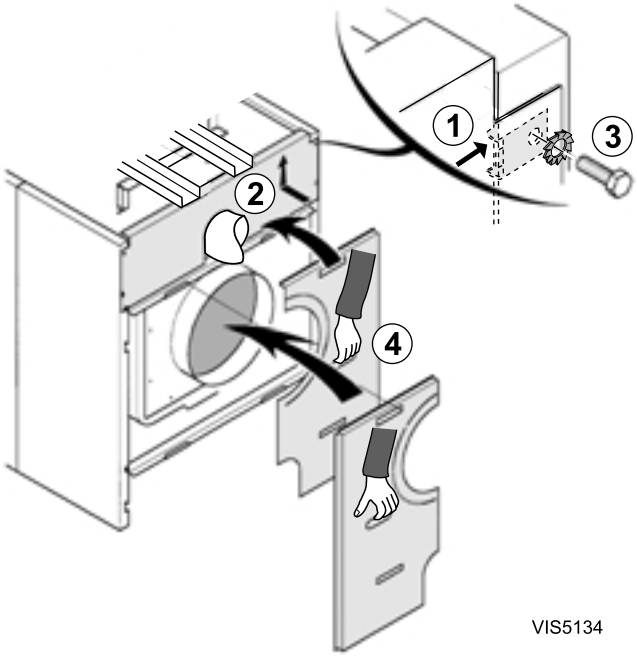

- Put the two clip-on nuts in place on the side panels ①.
- Fit the **upper rear panel** (package **FA5 or FA6**) onto the studs and push it up ②. Fasten with two H 8x16 screws and serrated washers ③.
- Fit the **two lower rear panels** (package **FA5 or FA6**) onto the rear crosspieces ④.

65 Assembling the Central Plate for 14 - 17 Sections

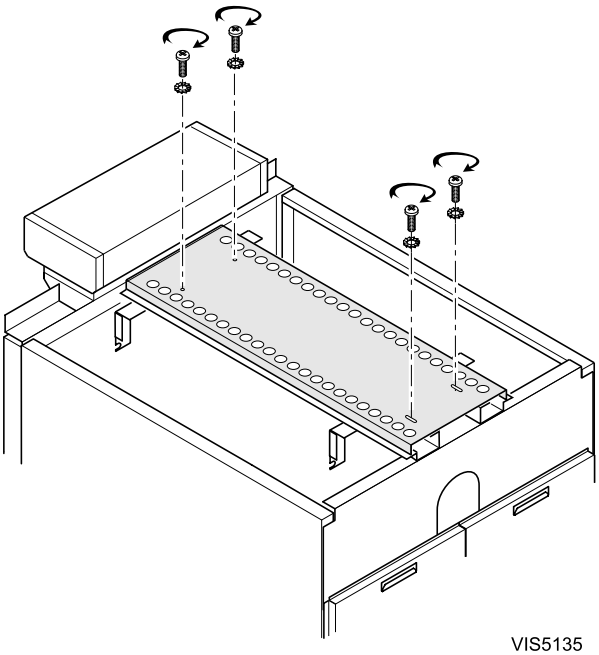

VIS5135

- Place the central plate on the cable channels with the round holes towards the front of the boiler.
- Fasten with H 8 x 30 screws and serrated washers.

66 Assembling the Central Plate for 18 - 25 sections

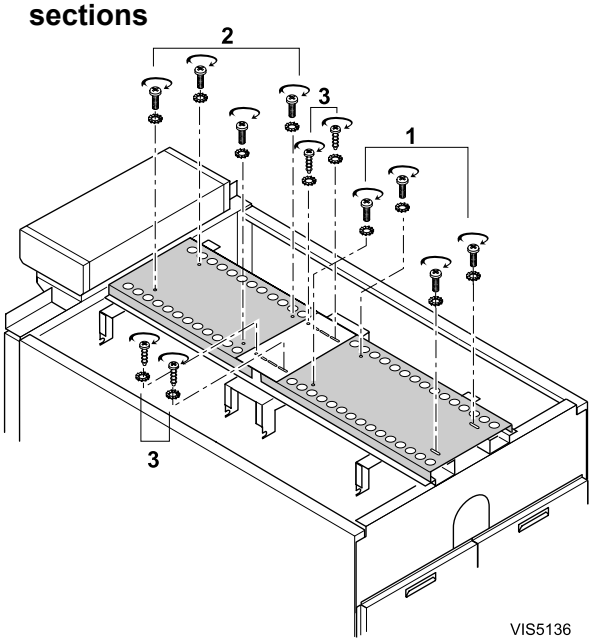

VIS5136

- Place the rear plate, which is **1200 mm long** ①.
- Fasten with four H 8x30 screws and serrated washers.
- Place the front plate with the round holes towards the front of the boiler ②.
- Fasten with four H 8 x 30 screws and serrated washers.
- Fasten the joining plate ③ with the round holes towards the front of the boiler with four tapping screws and serrated washers.

67

- Put in place **the sweeping cover insulating material** (packages **FA 30 - FA 41**):
  - GTE 14 - 17 : 2 pieces
  - GTE 18 - 25 : 4 pieces.

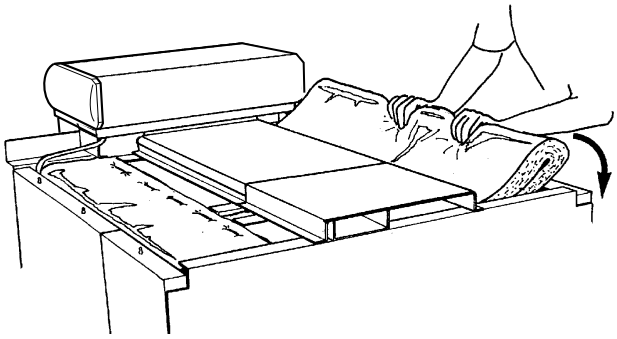

VIS5137

68

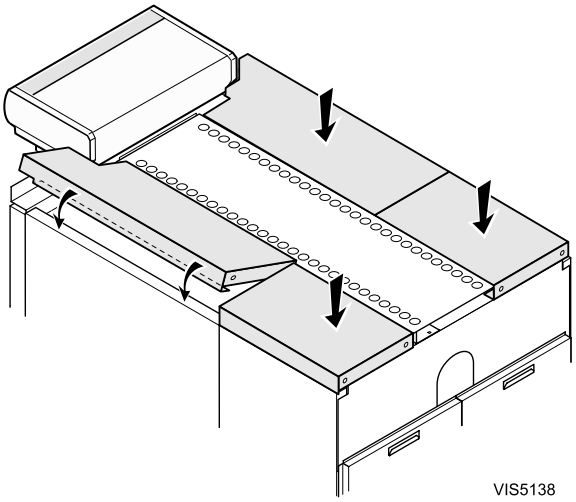

Type of Boiler	FRONT → REAR Central and Side Covers (Length in mm)				
GTE 14	800	600	600		
GTE 15	940	600	600		
GTE 16	1050	600	600		
GTE 17	940	600	400	400	
GTE 18	1050	600	400	400	
GTE 19	940	600	600	400	
GTE 20	940	600	600	600	
GTE 21	1050	600	600	600	
GTE 22	940	600	600	400	400
GTE 23	1050	600	600	400	400
GTE 24	940	600	600	600	400
GTE 25	1050	600	600	600	400

400 mm long panel in Package FA 10
600 mm long panel in Package FA 11
800 mm long panel in Package FA 7
940 mm long panel in Package FA 8
1050 mm long panel in Package FA 9

- Place **the side covers** (package **FA7 to FA11**, see table) from the front to rear. They have the same lengths as the side panels.

69 Identification Plate and CE Marking

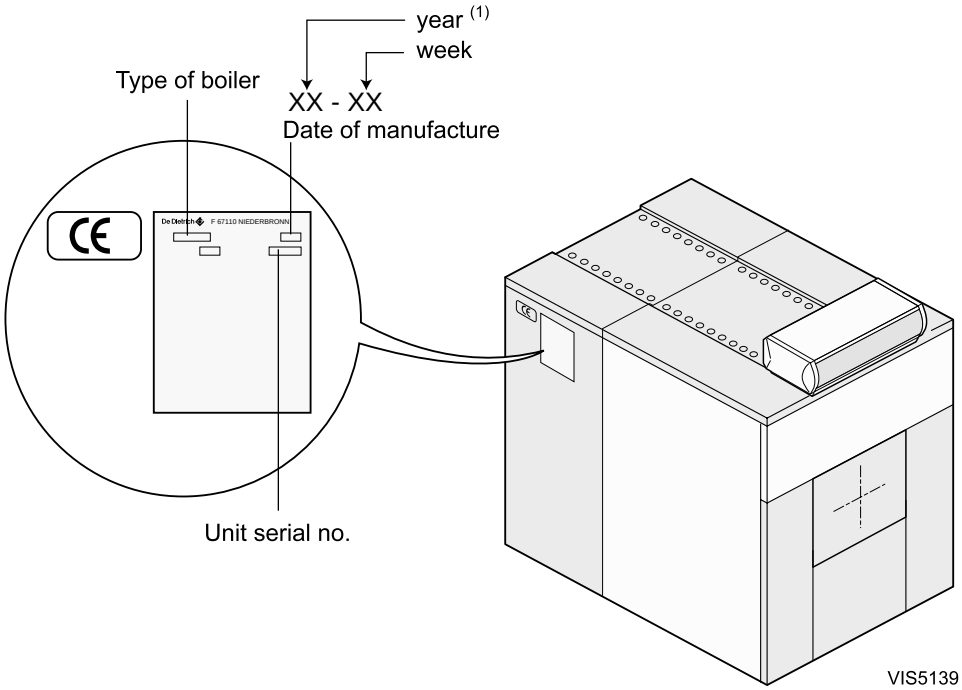

- Glue the identification plate and CE marking on the casing of the boiler in an easily visible location.

(1) 08 = 1998,
09 = 1999,
...

7. CONTROL PANEL

7.1 Standard Control Panel

IMPORTANT
The boiler connections shall be performed by a qualified professional only.
Strict compliance with these operating, starting up and connecting instructions is a precondition for the correct operation of the boiler.

7.1.1 Overview

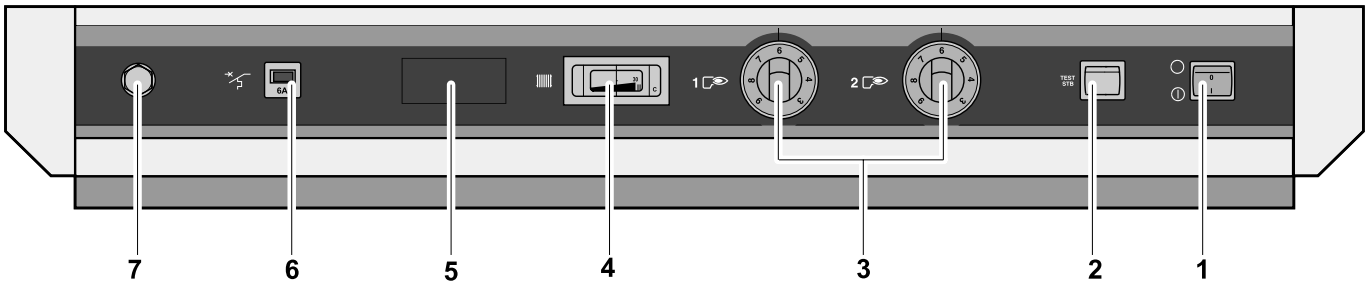

VIS5143

1. **Main On/Off switch**
2. **Test STB switch :** temporary action to test the safety thermostat.
3. **Boiler thermostats** (with 30-85°C adjustment range) : A factory-set stop limits the maximum temperature to 75°C. The stop may be moved if necessary (see section 6).
4. **Boiler thermometer**
5. **Location for flue gas thermometer** (optional).
6. **6 A Circuit-breaker** with delayed action and manual reset.
7. **Safety thermostat** with manual reset, set to 110°C

7.1.2 Operating Principle

The boiler may be regulated :

- **either by the boiler thermostats,**

  If the burner fitted in the boiler is a two-stage burner, each thermostat may be allocated to the operating of a single stage. In this case, the second-stage thermostat must always be set to a value which is at least 5°C below that of the first-stage thermostat.

- **or by a control unit in the electrical cabinet**

  In this case, safe operation is ensured by the safety thermostat with manual reset.

7.1.3 Electrical Connections

The electrical connections shall be made in compliance with the instructions given in the electrical diagrams supplied with the device and the guidelines provided in the manual.

Care shall be taken to comply with applicable standards and regulations. The unit shall be powered by a circuit with an omnipole switch with an opening distance greater than 3 mm.

The earth connection shall comply with standards in force.

IMPORTANT

The electrical wiring has been carefully checked in the factory and the internal connections of the control panel must not be modified in any event.

Access to the connecting strip

Unscrew the three fastening screws on the rear of the control panel and open the panel.

Cable passage

Pass the connecting cables through the two cutouts on the rear of the boiler and bring them to the front via the cable channels.

Then bring them towards the control panel through the rectangular openings in the front cover.

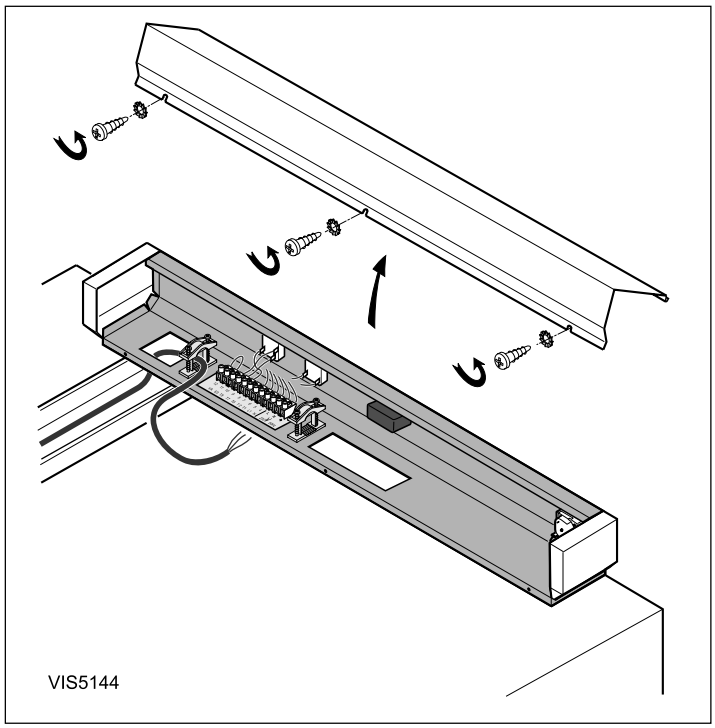

Main supply

Connect the main supply to terminals 1, 2 and 3 of the connecting strip as shown opposite.

Flow switch

Connect the flow switch contact in series to the safety circuit (e.g. between terminal 5 of the terminal block and burner terminal L1).

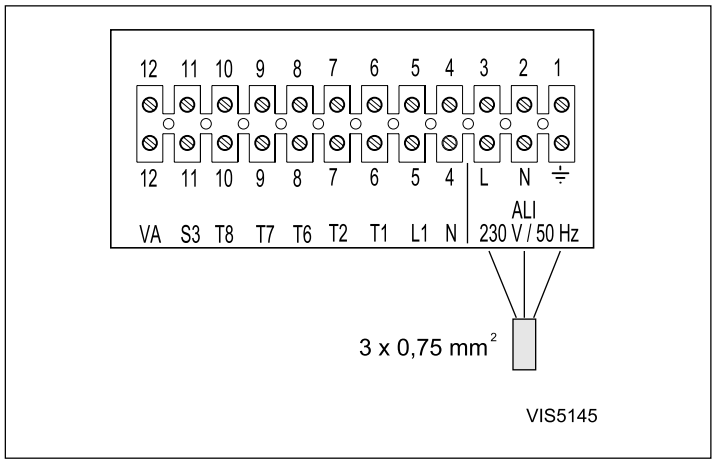

CONNECTING THE BURNER

Burner cable

The control panel is supplied with the burner power supply cable, with two 7 and 4-pin European plugs on one end and a terminal block with male connecting terminals on the other.

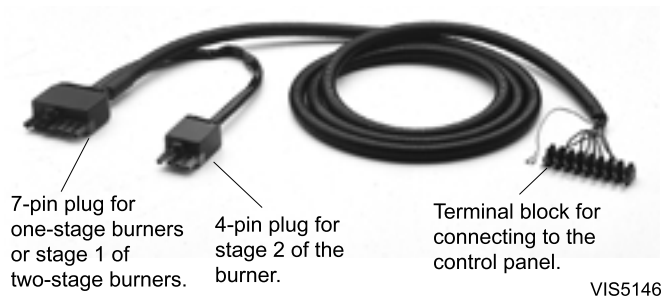

Control panel connections

Connect the terminal block with the male connecting terminals to fixed terminals 4 -12 in the control panel.

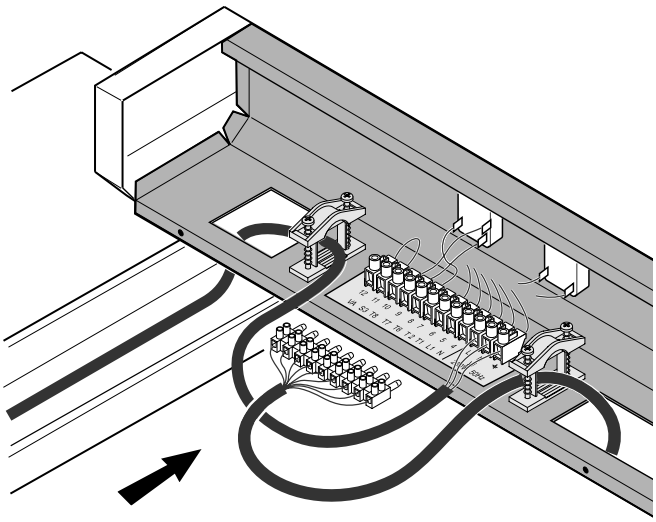

Burner connections

Burners with plug
Refer to the figure of the burner cable.

Burners without plugs
In this case, you will need to rewire the connectors supplied with the burner cable.

The diagram opposite shows the wire numbers and terminals of the burner connectors.

The table on the following page specifies the way in which the cables are to be connected to the burner control box.

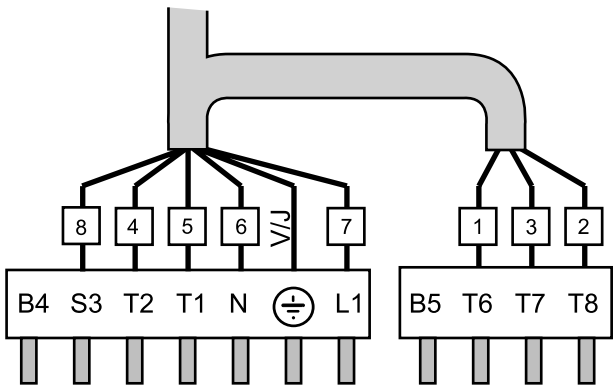

Connector Terminal No	Wire No	From	Connection to the burner Control Box
L1	7	Continuous phase from the safety thermostat	Burner main supply
⏚	V/J	Earth connection	Earth connection
N	6	Neutral taken after On/Off	Neutral terminal
T1/T2	5/4	Dry contact of the stage 1 boiler thermostat	Insert in the control circuit of boiler stage 1
S3	8	Burner alarm indicator	Alarm output (phase)
T6	1	Stage 2 boiler thermostat input	Insert in the control circuit of burner stage 2
T7	3	Stage 2 "boiler off" thermostat output	Connect only if the burner is of the modulating type
T8	2	Stage 2 "boiler on" thermostat output	Insert in the control circuit of burner stage 2

If the electrical characteristics of the burner exceed the following values:

- start current> 16 A or
- P > 450 W (or 1/2 cont. hp. motor), or
- I > 2 A cos φ = 0, 7

The burner controls must be relayed.

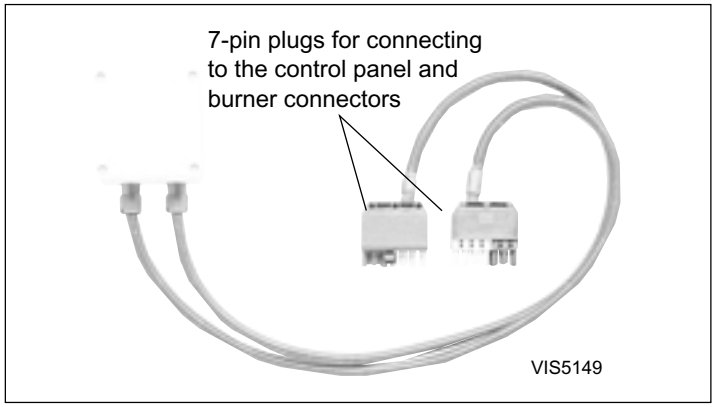

Connecting a safety thermostat alarm transfer system

The isolated pin standing by on the safety thermostat is used to connect an alarm transfer system (thermostat with reversing contact).

If the safety thermostat trips, a 230 V signal is active at that terminal.

Proceed as follows to connect the alarm transfer system :

- Open the control panel (3 screws on the rear) to access the rear of the safety thermostat.
- Connect the alarm transfer system to the thermostat pin using a 6.35 mm Faston clip. The other end of the cable is connected to an indicator or sound alarm.

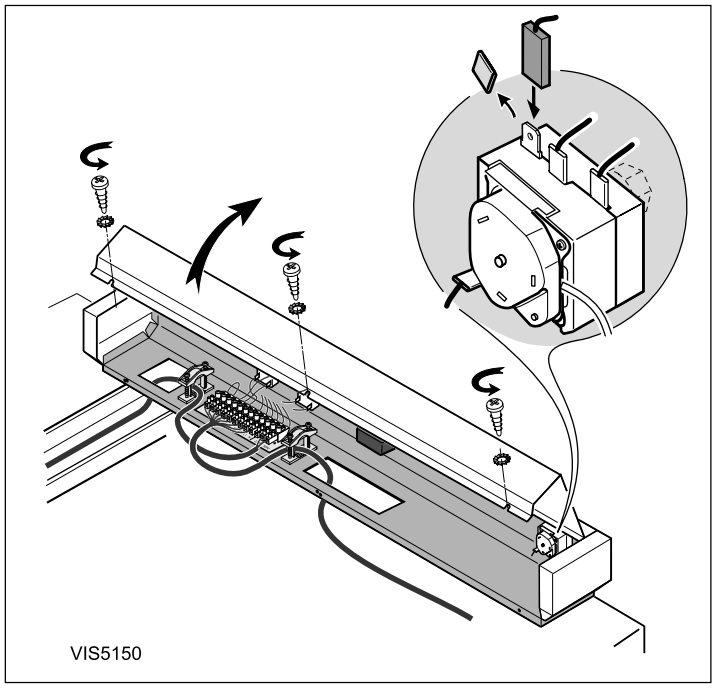

7.1.4 Schematic Diagram

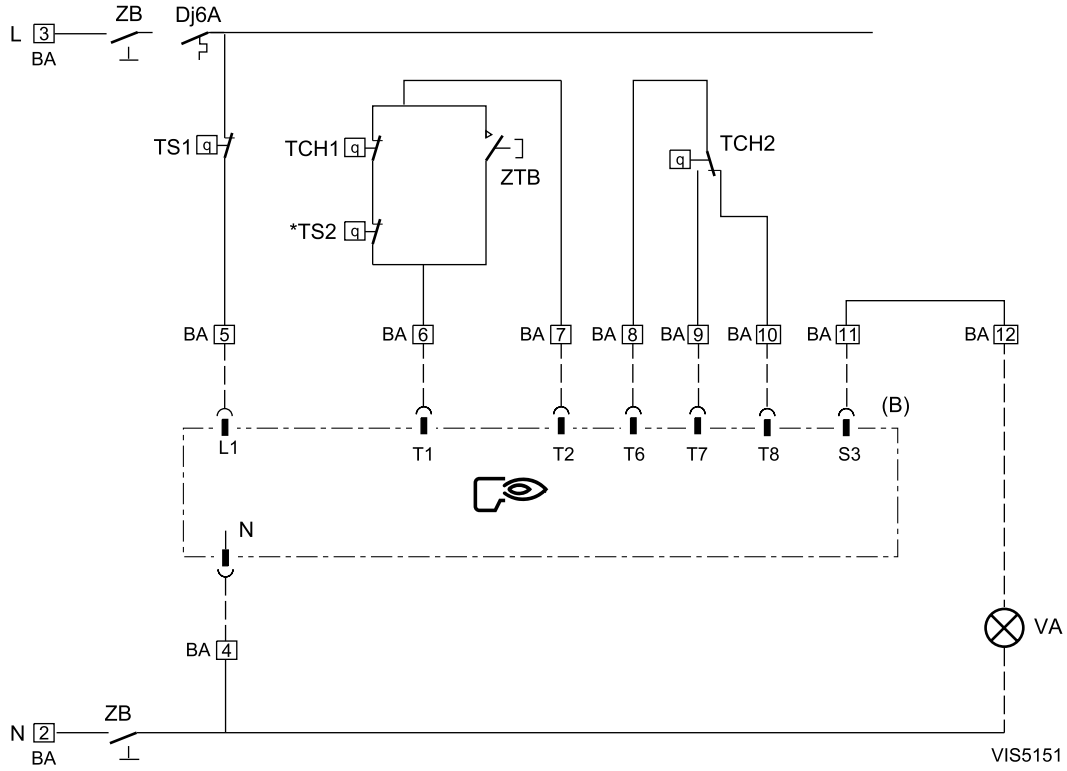

B	Burner	**TS2**	Condenser safety thermostat (for versions GTG 300)
BA	Connection strip	**VA**	Alarm indicator
Dj 6 A	6 A Circuit-breaker	**ZB**	Burner switch
L	Phase	**ZTB**	STB-Test switch
N	Neutral		Connecting strip
TCH1	Stage 1 boiler thermostat	*	Optional
TCH2	Stage 2 boiler thermostat		Connector
TS1	Safety thermostat		

Wiring Diagram Viscount GTE Standard

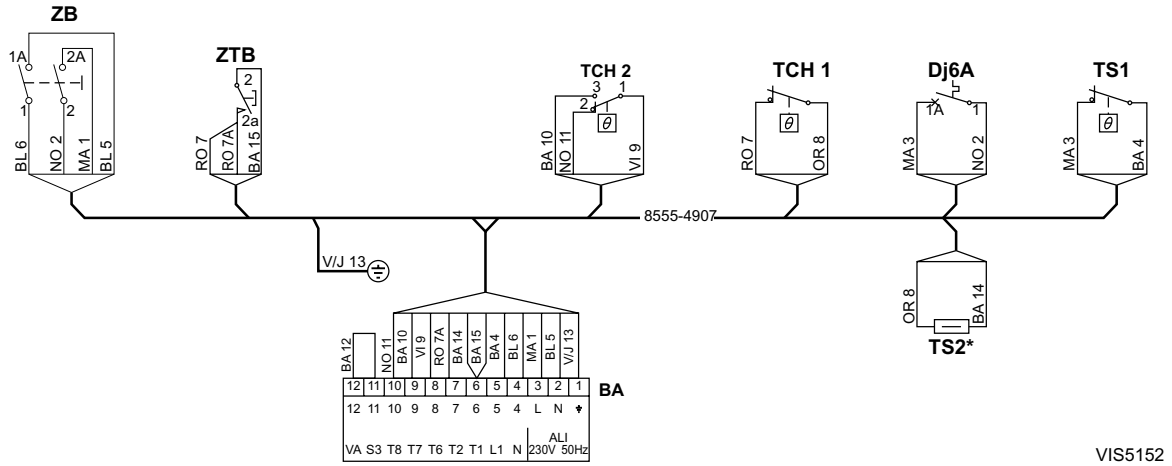

GR	Grey
NO	Black
MA	Brown
RO	Red
OR	Orange
BL	Blue
VI	Violet
BA	White
V/J ⊙	Green/Yellow

ALI	Main Supply
B	Burner
BA	Connecting Board
Dj6A	Circuit Breaker 6A
L	Phase
N	Neutral
TCH1	Boiler Thermostat 1st Stage
TCH2	Boiler Thermostat 2nd Stage
TS1	Safety Thermostat
TS2	Condenser Thermostat
VA	Alarm Indicator
ZB	Burner Switch
ZTB	Test Switch STB
*	Optional Delivered
⊙	Earth

BA 15	BA 6	ZTB 2
BA 14	TW	BA 6
V/J13	BA 1	⊙
BA 12	BA 11	BA 12
NO 11	BA 10	TCH2 2
BA 10	BA 9	TCH2 3
VI 9	BA 8	TCH2 1
OR 8	TCH1	TW
RO 7A	ZTB 2A	BA 7
RO 7	TCH1	ZTB 2A
BL 6	ZB 1	BA 4
BL 5	BA 2	ZB 1A
BA 4	TS1	BA 5
MA 3	Dj6A	TS1
NO 2	ZB 2	Dj6A
MA 1	BA 3	ZB 2A
Wire	Beginning	End

7.1.5 Starting Up and Operation

IMPORTANT
Initial starting up shall be performed by a qualified professional.

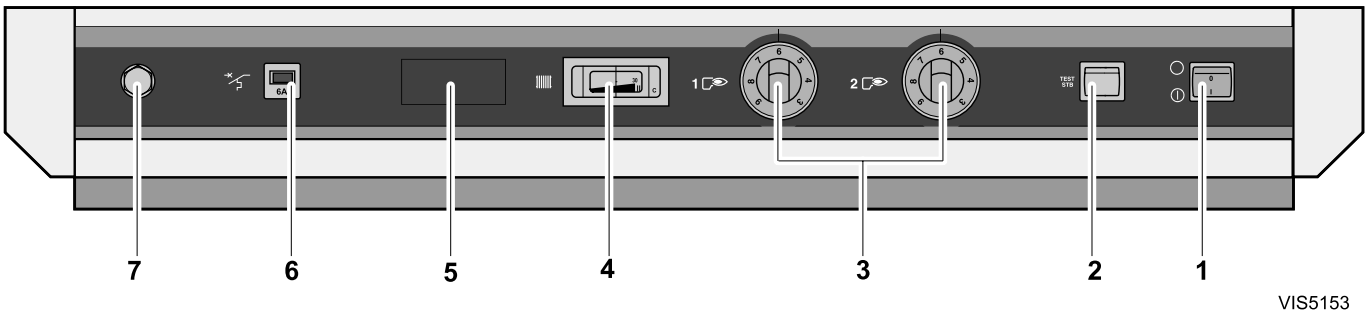

Before turning the boiler on, make sure that the installation is **filled with water**.

Perform the start-up operations in the order given below :

- **Boiler temperature regulation by means of the thermostats.**

Set boiler thermostats **3** to the selected position. If the burner has two stages, the stage 2 thermostat must always be set to value which is approximately 5°C less than that of the stage 1 thermostat.

If required, move the maximum temperature stop as instructed below.

IMPORTANT
If there is no control unit, we advise you never to set the boiler thermostat below mark **4** (approx. 40ºC) in order to avoid the risk of combustion products condensing on the walls of the boiler.

- **Control unit in heating cabinet**
  Refer to the instructions supplied with the control unit.
- **Make sure that safety thermostat 7 is set** by unscrewing the hexagonal cap and pressing the reset button with a screwdriver.
- Set main On/Off switch **1** to the On ①.

Moving the thermostat stop :

The stop is factory-set to limit the maximum temperature to 75°C. To move the stop, proceed as follows :

- Pull the thermostat button out carefully (use pliers and a cloth).
- Remove the stop with the pliers.
- Put the stop in the hole of the desired higher temperature (maximum 85°C).

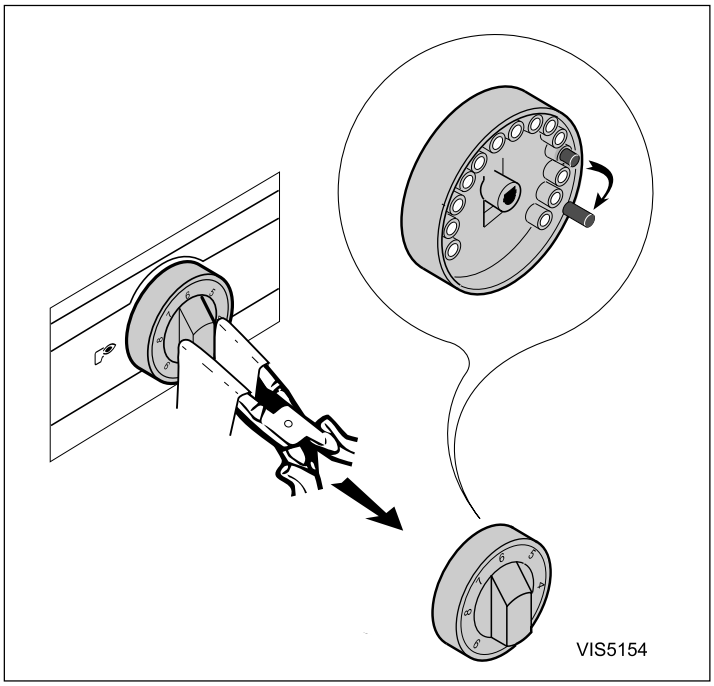

7.2 De Luxe Control Panel

7.2.1 Description

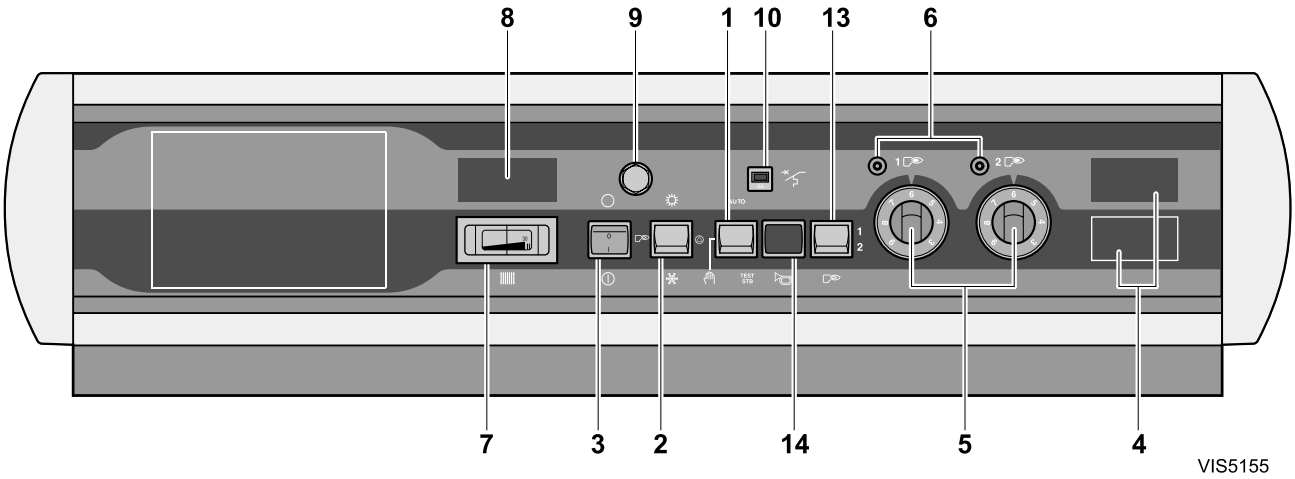

1. **Three-position switch Auto /Manual / ✋ / TEST STB**

   The switch may be left on either position manual ✋ or automatic **AUTO**.

   Test STB: temporary action to test the safety thermostat:

   Press the TEST STB switch and set pump shut-off switch 2 ⊳ to the "summer" position ☼.

2. **Double Switch Burner / Heating pump:**

   This double button is used to control the burner and the heating pump.

   Both buttons are in "Winter" ❄ position:
   heating and hot water production systems operate (if a hot water tank is included).

   Both buttons are in "Summer" ☼ position:
   only the domestic hot water production system operates (if a hot water tank is included).

3. **Main ON/OFF switch**

4. **Location for hour run meter**

   for the first and second stage (optional).

5. **Boiler thermostats**
   (with 30º to 85ºC adjustment range):

   A factory-set stop limits the maximum temperature to 75ºC. The stop may be moved if necessary (see section 5.1).

6. **Stage 1 or stage 2 indicators:**

   These only go on if the relevant thermostat or control unit require heating and if the safety contact is closed.

7. **Boiler thermometer**

8. **Location for flue gas thermometer** (optional)

9. **Safety thermostat with manual reset**
   (set to 110ºC).

10. **6 A Circuit-breaker**

    with delayed action and manual reset.

13. **Switch for selecting the number of burner stages**

14. **Burner alarm indicator**

7.2.2 Electrical Connections

IMPORTANT
The electrical wiring has been carefully checked in the factory and the internal connections of the control panel must not be modified in any event.

The electrical connections shall be made in compliance with the instructions given in the electrical diagrams supplied with the device and the guidelines provided in the manual.

Care shall be taken to comply with applicable standards and regulations. The unit shall be powered by a circuit with an omnipole switch with an opening distance of over 3 mm. The earth connection shall comply with standards in force.

Installation

All the connections shall be made to the terminal block provided for that purpose in the boiler control panel.

Proceed as follows to open the control panel:

① Loosen the two screws located on either side of the front of the panel by two turns.

② Tilt back the control panel.

③ Unscrew the component guard cover (two screws and serrated washers).

Bring the connecting cables to the control panel through the openings located on the rear panel of the boiler and one or two cable channels, depending upon the type of boiler.

④ Fasten the cables to the base of the control panel with cable clamps (6 cable clamps supplied in the bag) assembled as shown opposite.

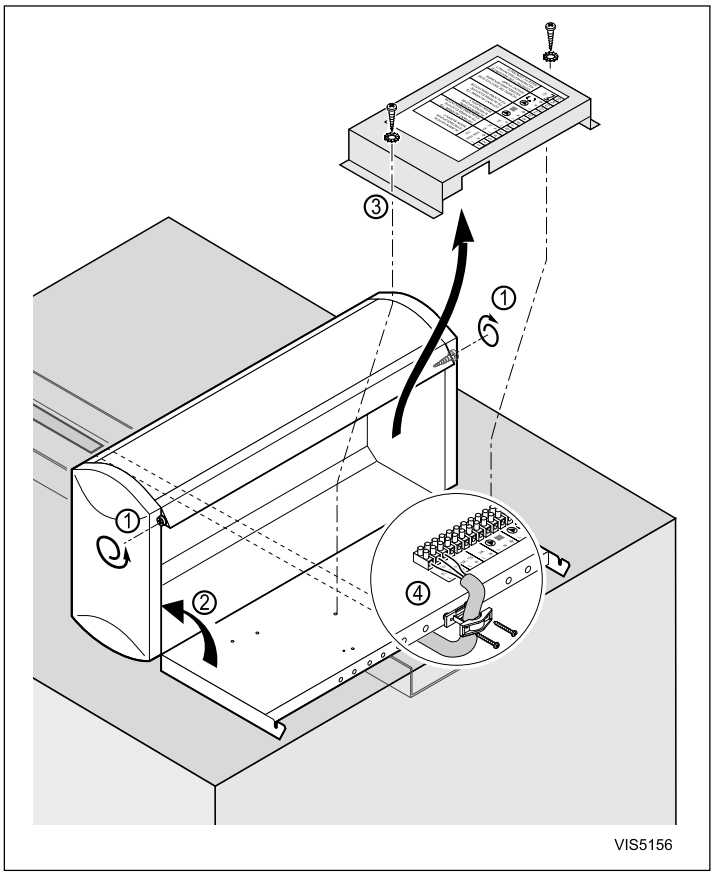

Make the connections as shown opposite.

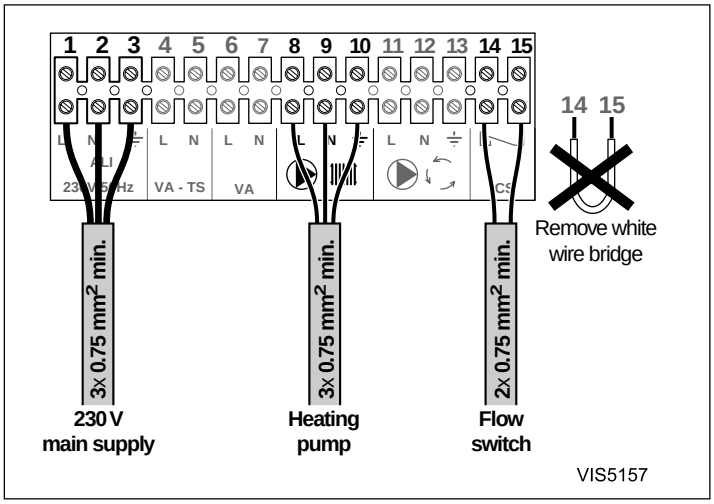

Connecting one or two hour run meters (package IC8)

One or two optional hour run meters (stage 1 and 2) may be fitted on the front of the control panel.

Proceed as follows :

- Cut the cover off with a cutter along the edges of the coloured rectangle.
- Pull out the two wires standing by in the control panel.
- Connect the wires to the hour run meter (the wires are interchangeable).
- Clip the hour run meter into the control panel.

If the burner is a one-stage burner, the counter displays the burner operating time.

If the burner has two stages, the hour run meters display the operating time of each stage.

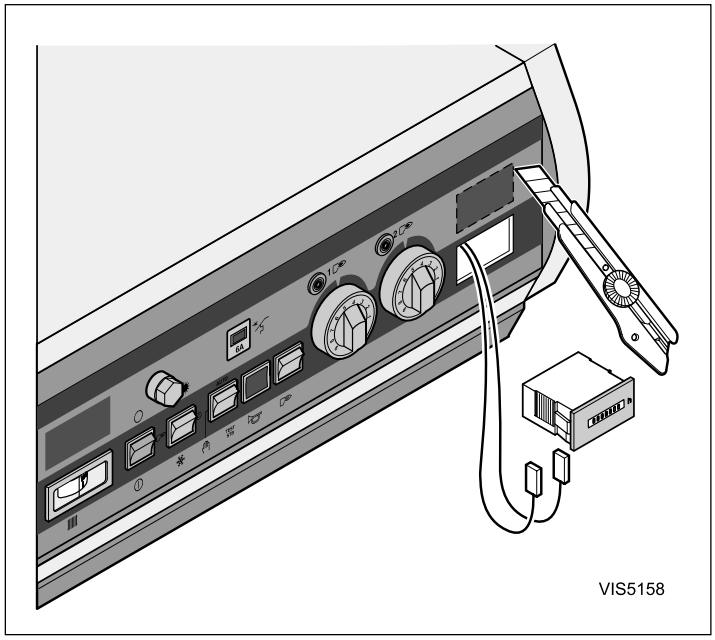

Connecting the flue gas thermometer (package ID 28)

An optional flue gas thermometer may be fitted on the front of the control panel.

Proceed as follows :

- Cut the cover off with a cutter along the edges of the coloured rectangle.
- Clip the thermometer into the opening.
- Bring the sensor to the back of the boiler via the cable channel and insert it in the flue gas pipe.

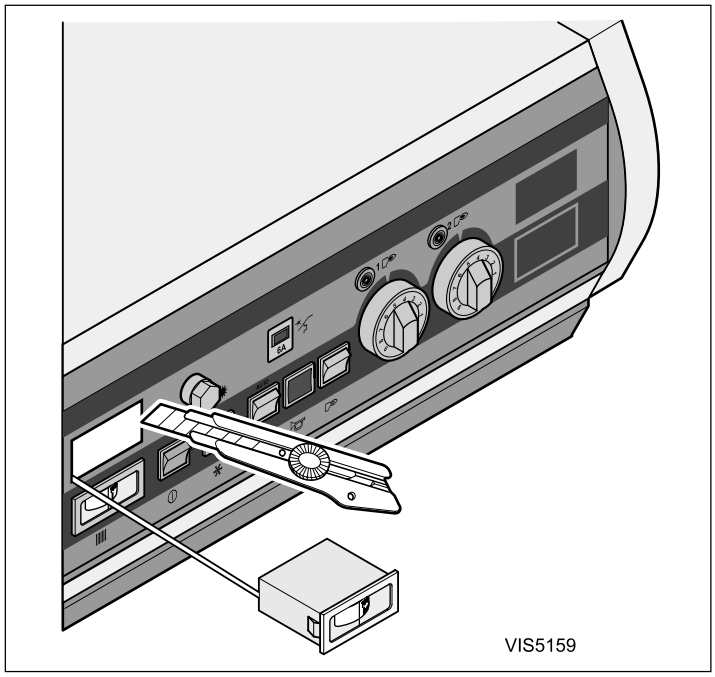

Connecting the burner

The control panel is supplied with the burner power cable.

One end of the cable has two 7 and 4-pin European plugs which are connected to the burner connectors. The other end of the cable is connected to the control panel.

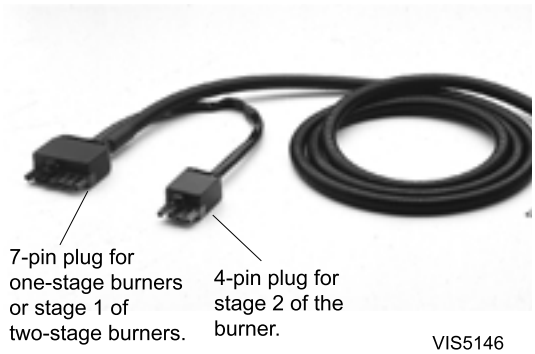

Burner without plug-in connectors

In this case, the connectors supplied with the burner cable must be rewired.

The diagram opposite shows the wire numbers and the terminals of the burner connectors.

The table below specifies the way in which the cables are to be connected on the burner control box.

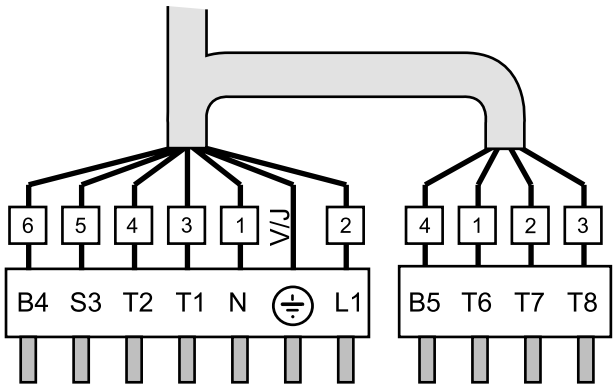

Connector Terminal No	Wire No	From	Connection to the burner Control Box
L1	2	Continuous phase from the safety thermostat	Burner main supply
⏚	V/J	Earth connection	Earth connection
N	1	Neutral taken after On/Off	Neutral terminal
T1/T2	3/4	Dry contact of the stage 1 boiler thermostat	Insert in the control circuit of boiler stage 1
S3	5	Burner alarm indicator	Alarm output (phase)
B4	6	Stage 1 On indicator (or hour run meter)	Stage 1 operation monitoring output (phase)
B5	4	Stage 2 On indicator (or hour run meter)	Stage 2 operation monitoring output (phase)
T6	1	Stage 2 boiler thermostat input	Insert in the control circuit of burner stage 2
T7	2	Stage 2 "boiler off" thermostat output	Connect only if the burner is of the modulating type
T8	3	Stage 2 "boiler on" thermostat output	Insert in the control circuit of burner stage 2

If the electrical characteristics of the burner exceed the following values:

- start current> 16 A or
- P > 450 W (or 1/2 cont. hp. motor), or
- I > 2 A cos φ = 0, 7

The burner controls must be relayed.

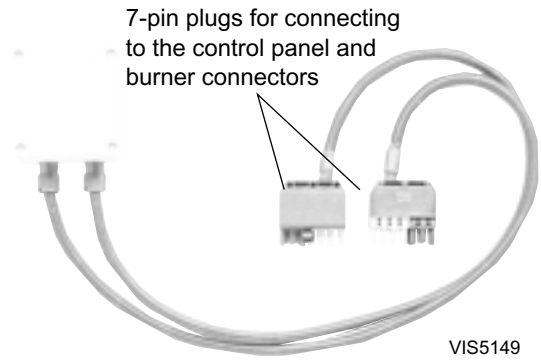

7.2.3 Schematic Diagrams

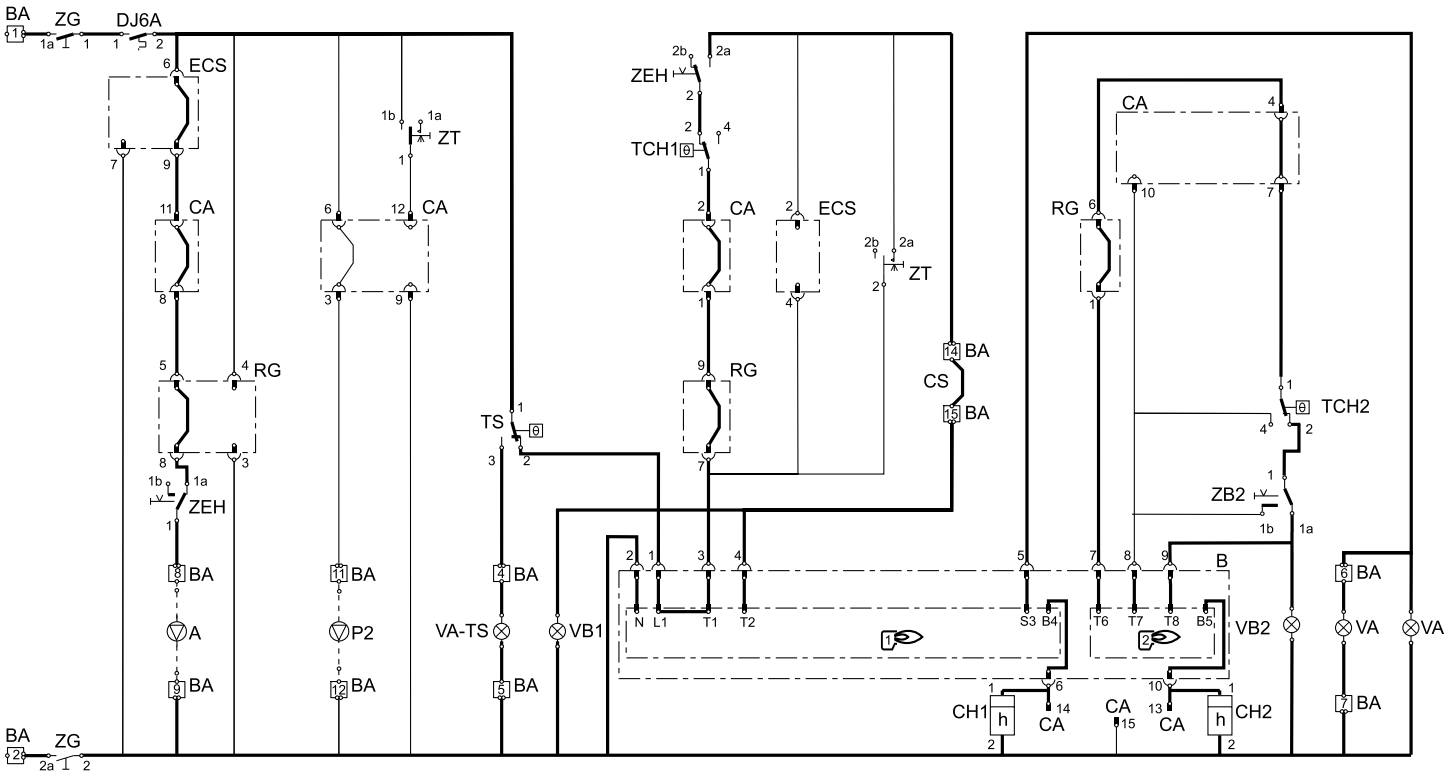

A	HEATING PUMP	**RG**	BOILER THERMOSTAT 2nd STAGE
B	BURNER	**TCH1**	SAFETY THERMOSTAT
BA	CONNECTING BOARD	**TCH2**	ALARM INDICATOR
CA	CASCADE CONNECTION	**TS**	SAFETY THERMOSTAT ALARM INDICATOR
CH1	SAFTEY CONTACT	**VA**	ON/OFF INDICATOR 1st STAGE
CH2	CIRCUIT BREAKER	**VA-TS**	ON/OFF INDICATOR 2nd STAGE
CS	DOMESTIC HOT WATER	**VB1**	EARTH
Dj6A	SHUNT PUMP	**VB2**	BURNER SWITCH 2nd STAGE
ECS	REGULATOR	**ZEH**	SUMMER-WINTER SWITCH
P2	BOILER THERMOSTAT 1st STAGE	**ZG**	MAIN SWITCH
		ZT	TEST SWITCH

VIS5162

CONTROL PANEL

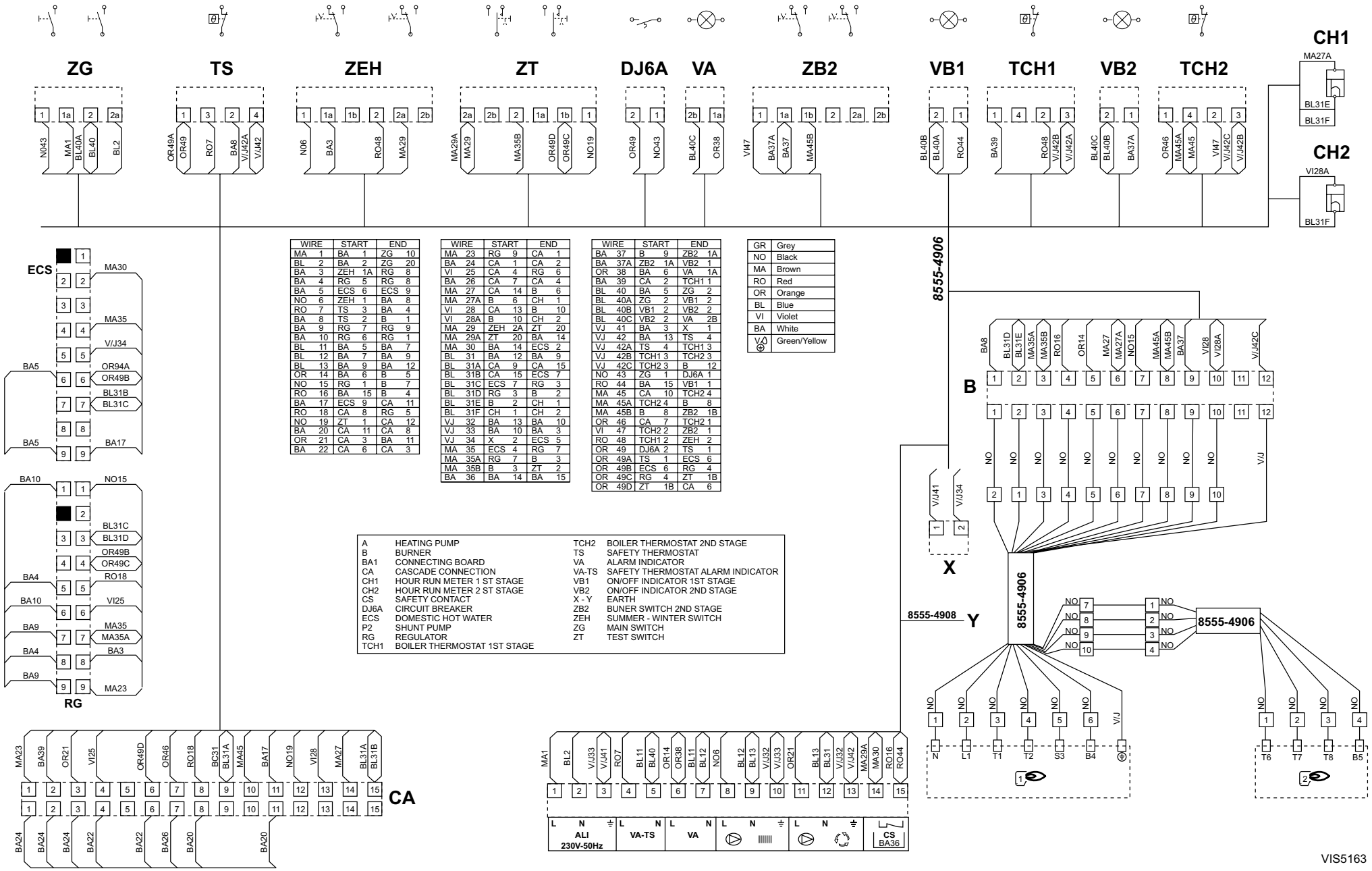

WIRE	START	END
MA 1	BA 1	ZG 10
BL 2	BA 2	ZG 20
BA 3	ZEH 1A	RG 8
BA 4	RG 5	RG 8
BA 5	ECS 6	ECS 9
NO 6	ZEH 1	BA 8
RO 7	TS 3	BA 4
BA 8	TS 2	B 1
BA 9	RG 7	RG 9
BA 10	RG 6	RG 1
BL 11	BA 5	BA 7
BL 12	BA 7	BA 9
BL 13	BA 9	BA 12
OR 14	BA 6	B 5
NO 15	RG 1	B 7
RO 16	BA 15	B 4
BA 17	ECS 9	CA 11
RO 18	CA 8	RG 5
NO 19	ZT 1	CA 12
BA 20	CA 11	CA 8
OR 21	CA 3	BA 11
BA 22	CA 6	CA 3

WIRE	START	END
MA 23	RG 9	CA 1
BA 24	CA 1	CA 2
VI 25	CA 4	RG 6
BA 26	CA 7	CA 4
MA 27	CA 14	B 6
MA 27A	B 6	CH 1
VI 28	CA 13	B 10
VI 28A	B 10	CH 2
MA 29	ZEH 2A	ZT 20
MA 29A	ZT 20	BA 14
MA 30	BA 14	ECS 2
BL 31	BA 12	BA 9
BL 31A	CA 9	CA 15
BL 31B	CA 15	ECS 7
BL 31C	ECS 7	RG 3
BL 31D	RG 3	B 2
BL 31E	B 2	CH 1
BL 31F	CH 1	CH 2
VJ 32	BA 13	BA 10
VJ 33	BA 10	BA 3
VJ 34	X 2	ECS 5
MA 35	ECS 4	RG 7
MA 35A	RG 7	B 3
MA 35B	B 3	ZT 2
BA 36	BA 14	BA 15

WIRE	START	END
BA 37	B 9	ZB2 1A
BA 37A	ZB2 1A	VB2 1
OR 38	BA 6	VA 1A
BA 39	CA 2	TCH1 1
BL 40	BA 5	ZG 2
BL 40A	ZG 2	VB1 2
BL 40B	VB1 2	VB2 2
BL 40C	VB2 2	VA 2B
VJ 41	BA 3	X 1
VJ 42	BA 13	TS 4
VJ 42A	TS 4	TCH1 3
VJ 42B	TCH1 3	TCH2 3
VJ 42C	TCH2 3	B 12
NO 43	ZG 1	DJ6A 1
RO 44	BA 15	VB1 1
MA 45	CA 10	TCH2 4
MA 45A	TCH2 4	B 8
MA 45B	B 8	ZB2 1B
OR 46	CA 7	TCH2 1
VI 47	TCH2 2	ZB2 1
RO 48	TCH1 2	ZEH 2
OR 49	DJ6A 2	TS 1
OR 49A	TS 1	ECS 6
OR 49B	ECS 6	RG 4
OR 49C	RG 4	ZT 1B
OR 49D	ZT 1B	CA 6

GR	Grey
NO	Black
MA	Brown
RO	Red
OR	Orange
BL	Blue
VI	Violet
BA	White
VJ	Green/Yellow

A	HEATING PUMP	TCH2	BOILER THERMOSTAT 2ND STAGE
B	BURNER	TS	SAFETY THERMOSTAT
BA1	CONNECTING BOARD	VA	ALARM INDICATOR
CA	CASCADE CONNECTION	VA-TS	SAFETY THERMOSTAT ALARM INDICATOR
CH1	HOUR RUN METER 1 ST STAGE	VB1	ON/OFF INDICATOR 1ST STAGE
CH2	HOUR RUN METER 2 ST STAGE	VB2	ON/OFF INDICATOR 2ND STAGE
CS	SAFETY CONTACT	X - Y	EARTH
DJ6A	CIRCUIT BREAKER	ZB2	BUNER SWITCH 2ND STAGE
ECS	DOMESTIC HOT WATER	ZEH	SUMMER - WINTER SWITCH
P2	SHUNT PUMP	ZG	MAIN SWITCH
RG	REGULATOR	ZT	TEST SWITCH
TCH1	BOILER THERMOSTAT 1ST STAGE		

7.2.4 Starting Up and Operation

IMPORTANT
Initial starting up shall be performed by a qualified professional.

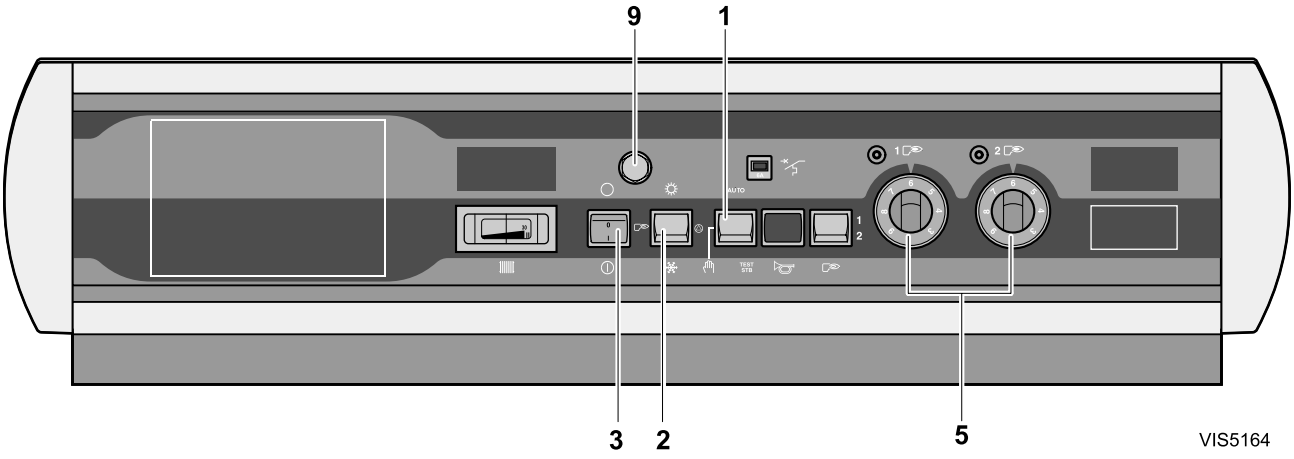

IMPORTANT
If there is no control unit, we advise you never to set the boiler thermostat below mark **4** (approx. 40ºC) in order to avoid the risk of combustion products condensing on the walls of the boiler.

Before turning the boiler on, make sure that the installation is filled with water.

Perform the start-up operations in the order given below:

- **Boiler temperature regulation by means of the thermostats.**

Set boiler thermostats **5** to the selected position. If the burner has two stages, the stage 2 thermostat must always be set to value which is approximately 5ºC less than that of the stage 1 thermostat.

If required, move the maximum temperature stop as instructed below.

- Set switch **1** to the **manual** position ✋.
- **Control unit in heating cabinet**
- Make sure that safety thermostat **9** is set by unscrewing the hexagonal cap and pressing the reset button with a screwdriver
- Set the burner and heating pump buttons 2 to the Winter ❄ position.
- Set main On/Off switch 3 to the On ⏻.

Moving the thermostat stop:

The stop is factory-set to limit the maximum temperature to 75ºC. To move the stop, proceed as follows:

- Pull the thermostat button out carefully (use pliers and a cloth).
- Remove the stop with the pliers.
- Put the stop in the hole of the desired higher temperature (maximum 85ºC).

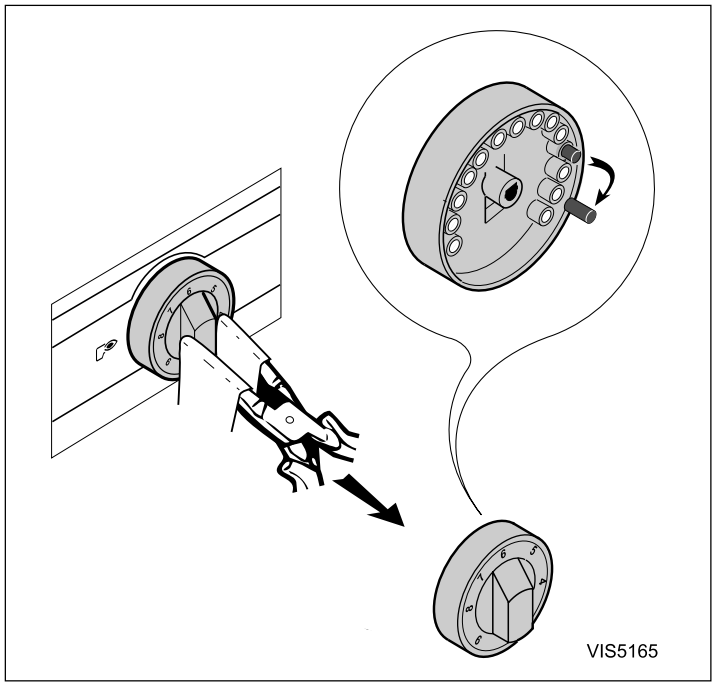

8. FUEL-OIL OR GAS CONNECTIONS

Refer to the instructions supplied with the burner

IMPORTANT
The operations described below shall only be performed with the boiler and **power supply off.**

1

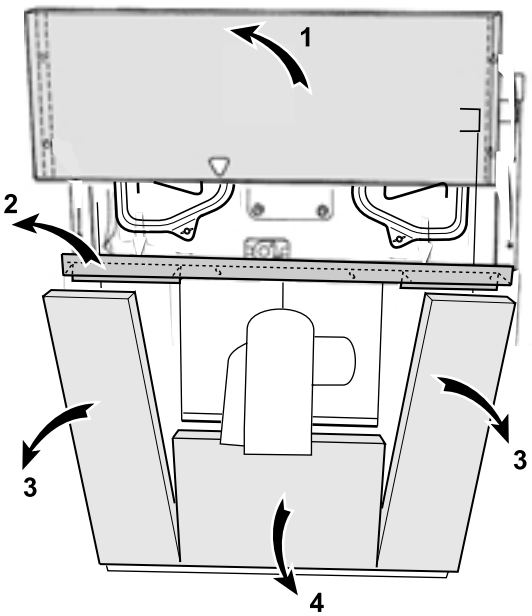

VIS5166

- Turn off the power to the boiler.
- Remove the upper front panel.
- Remove the retaining upper front crosspiece and then the lower left and right-hand front panels.
- Remove the lower front panel.

9. MAINTENANCE

9.1 Cleaning

The boiler will only operate efficiently if the exchange surfaces are kept clean.

The boiler should be swept as an when required, **at least along with the chimney, once a year** or more, depending upon applicable regulations and specific needs.

2

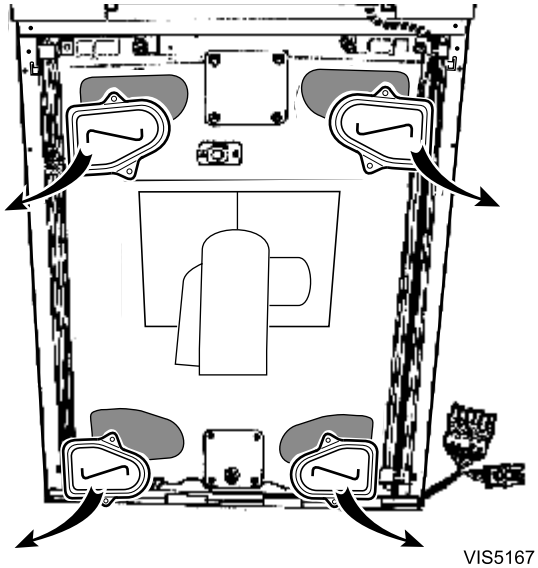

VIS5167

- Unfasten the wing nuts and remove the four sweeping doors.

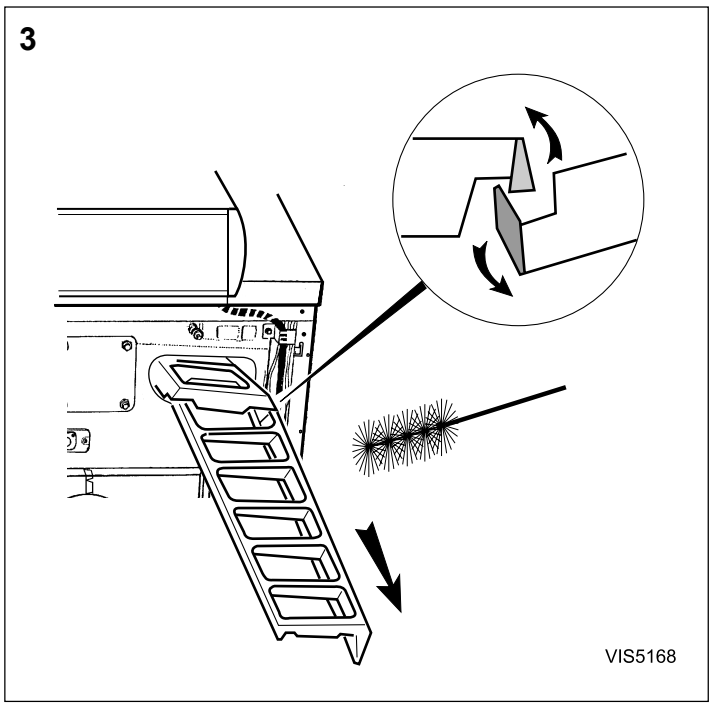

- Remove the baffle plates from the upper flue ways.
- Carefully sweep the four flue ways with the brush supplied for that purpose.
- Brush the baffle plates as well.
- If possible, use a vacuum cleaner.

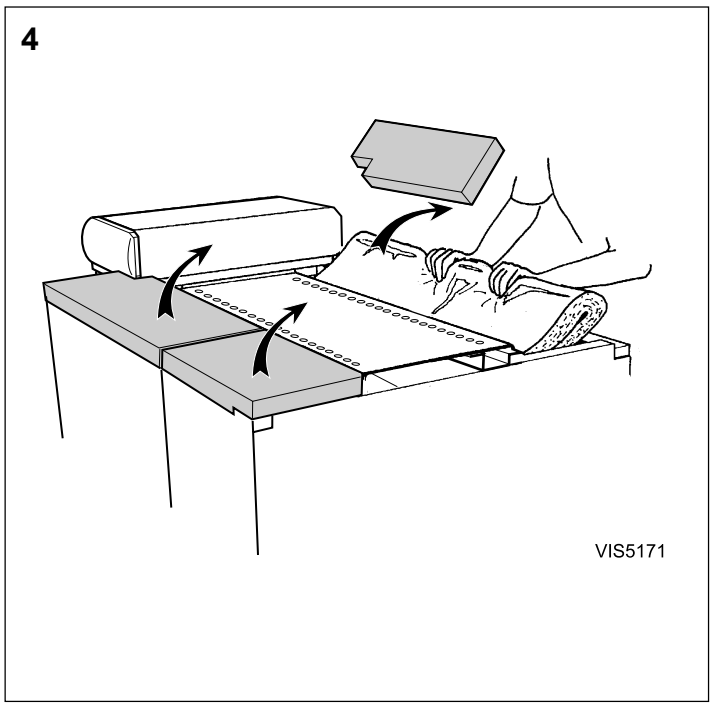

- Remove the left and right-hand casing covers.
- Remove the top insulating material.

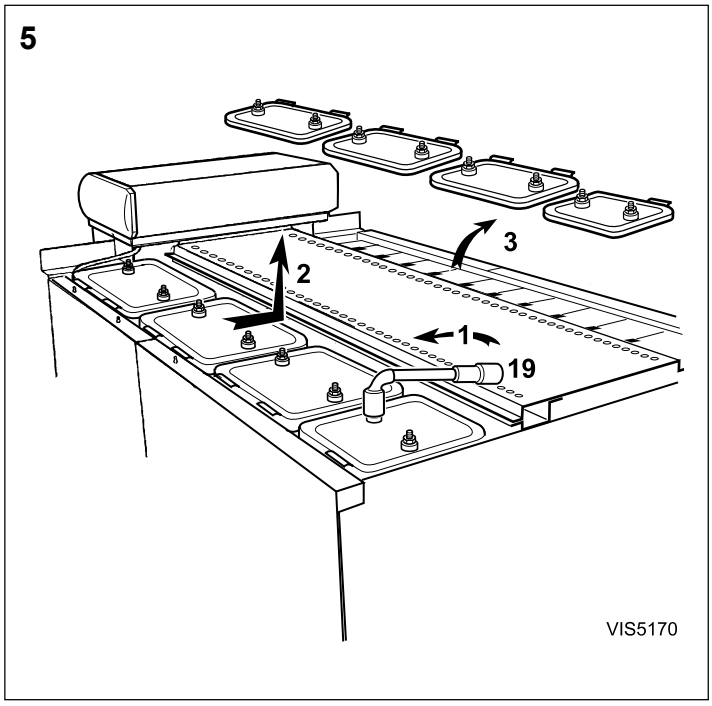

- Unfasten the nuts up to the stop.
- Push in the handles of the sweeping covers.
- Remove the sweeping covers.

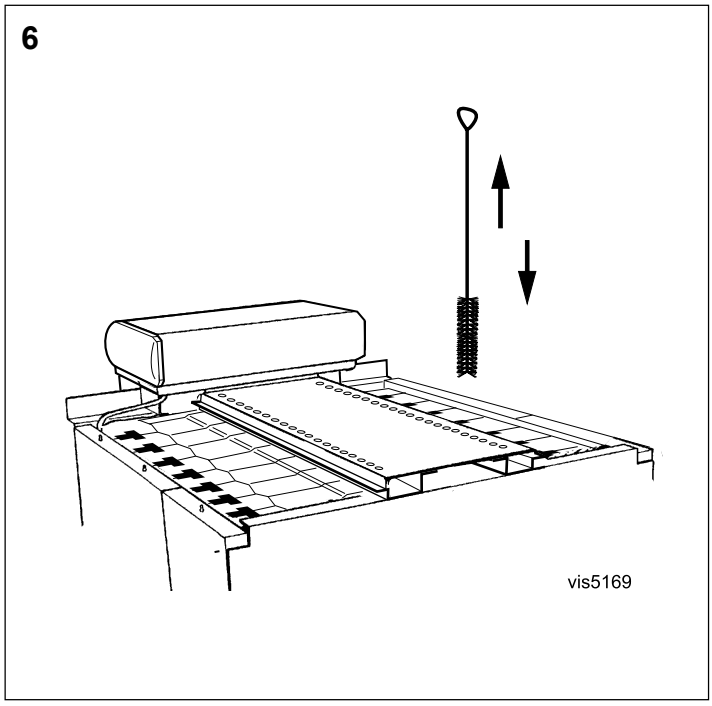

- Brush the vertical plates.
- Put back the sweeping covers, insulating material and casing covers by reversing the procedure above.

Note: chemical sweeping is recommended for such boilers.

- Put the baffle plates back in place.

  Interlock them with each other while fitting them into the flue ways.
- Close the upper sweeping doors.

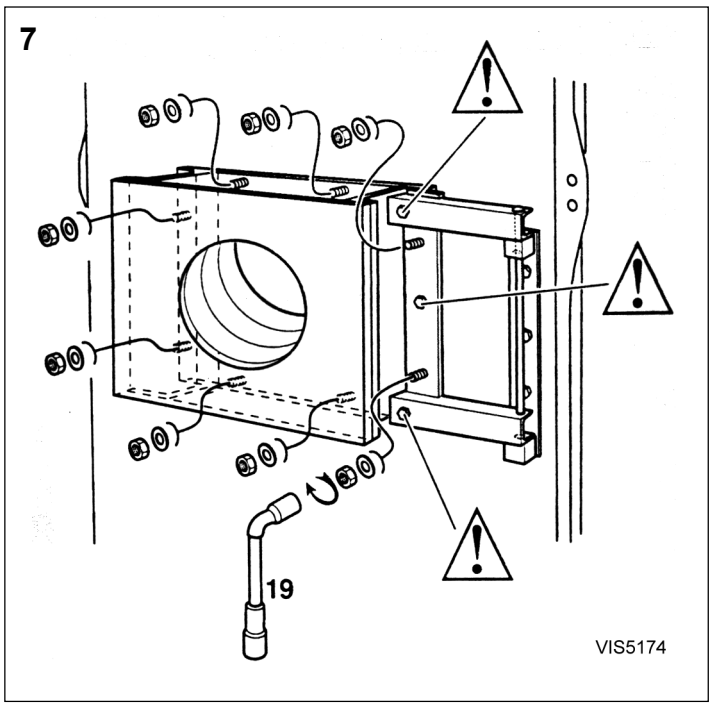

- Unscrew the eight closing nuts and open the furnace door

⚠ **These screws must not be unfastened in any event.**

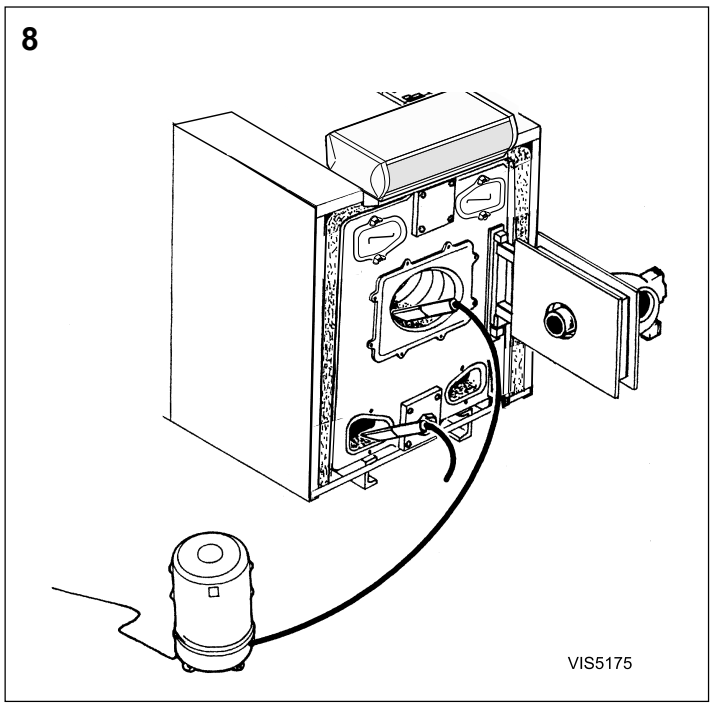

- Brush out the inside of the furnace.
- Clean the soot accumulated in the furnace and lower flue ways with a vacuum cleaner.
- Close the lower sweeping doors.
- Put back the front casing panels by reversing the removal procedure.

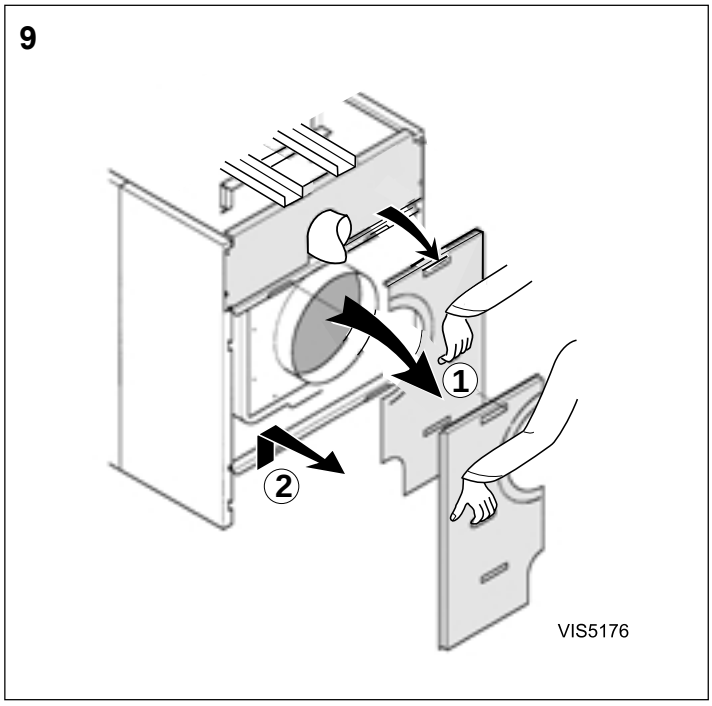

- Remove the lower rear panels.
- Remove the lower rear crosspiece.
- Remove the lower insulating material on the rear.

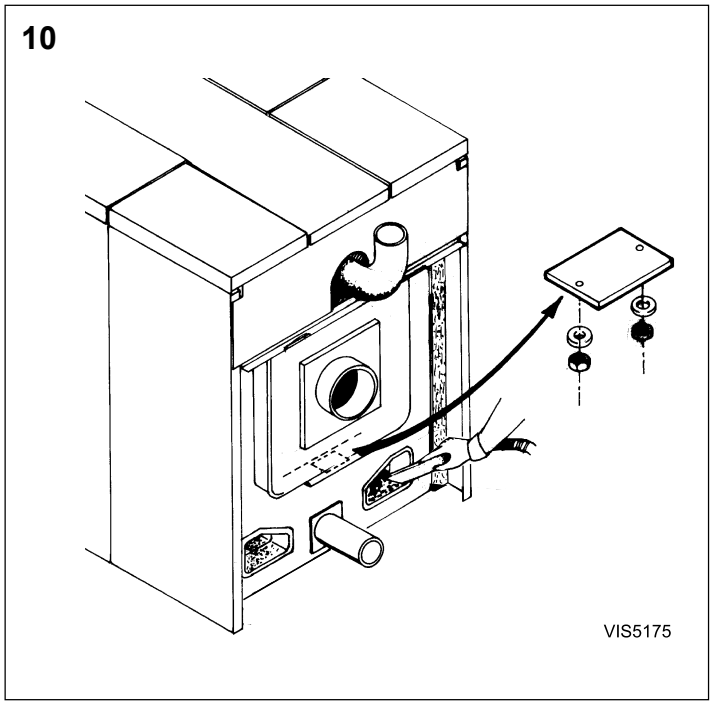

- Unfasten the wing nuts and remove the lower left and right-hand sweeping doors.
- Remove any soot deposit with a scraper or a vacuum cleaner.
- Open the lower sweeping cover of the flue gas box (two H 10 nuts + ø 10 washers).
- Remove the soot.
- Put back the sweeping cover and doors.
- Put back the lower insulating material, the crosspiece and panels by reversing the removal procedure.

9.2 Cleaning the Casing Material

Use a soapy solution and a sponge only. Rinse with clean water and dry with chamois leather or a soft cloth.

9.3 Precautions required in the case of long boiler stops (one or several years)

The boiler and the chimney must be swept carefully. Close all the doors of the boiler to prevent air from circulating inside the boiler.

We advise removing the pipe which connects the boiler to the chimney and to close off the nozzle with a cover.

9.4 Precautions required if the heating is stopped when there is a risk of freezing

We recommend the use of a correctly dosed antifreeze agent to prevent to the heating circuit from freezing. If this cannot be done, drain the system completely.

10. BURNER MAINTENANCE

Refer to the instructions supplied with the burner.

11. SYSTEM MAINTENANCE

11.1 Water level

Regularly check the level of water in the system and top up if required, taking care that cold water is not added suddenly into the boiler when it is hot.

This operation should be required only a few times in each heating season, with very low quantities of water. Otherwise, look for the leak and repair it.

11.2 Draining

We advise you against draining the system unless it is absolutely necessary.

12. IDENTIFICATION PLATE

The identification plate fixed on the side of the boiler during installation is used to identify the boiler correctly. It also provides the main specifications of the boiler.

(1) 08 = 1998,

09 = 1999,

...

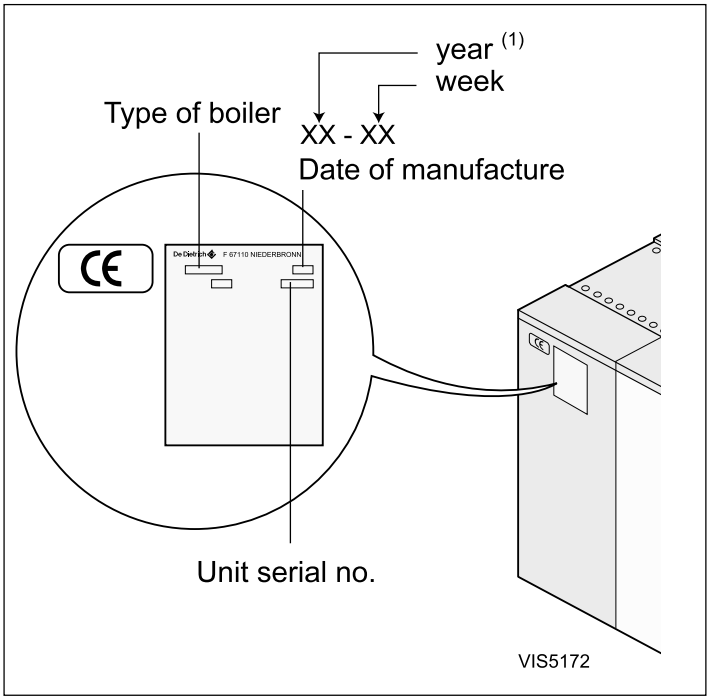

Caradon Plumbing Limited, P.O. Box 103, National Ave, Kingston upon Hull, HU5 4JN. Telephone: 01482 492 251 Fax: 01482 448 858. Registration No. London 322 137.

Technical Training

The Caradon Plumbing Limited Technical Training Centre offers a series of first class training courses for domestic, commercial and industrial heating installers, engineers and system specifiers.

For details of courses please ring:..... *01482 498432*

0049

Caradon Plumbing Limited pursues a policy of continuing improvement in the design and performance of its products. The right is therefore reserved to vary specification without notice.

March 2001 156830 A01

BOILERS Ideal

Ideal Installer/Technical Helpline: 01482 498 376

www.idealboilers.com